INTERNATIONAL MEDICAL CORPS
WASH PROGRAM
Khanano Kas SOLAR Power Water Supply Project

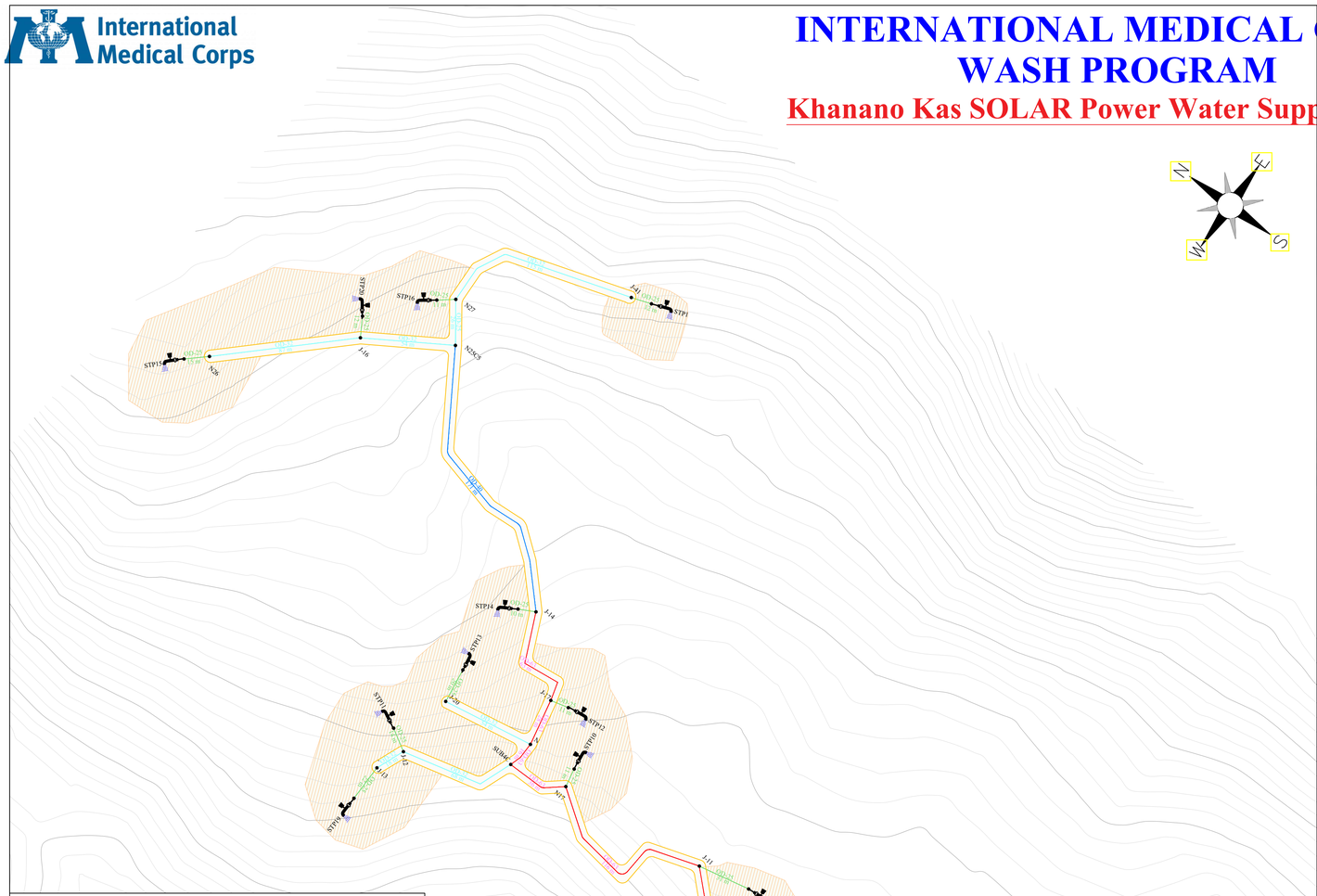

Stand post information

Tp #	House Hold Name	Tap coordinates		
		X (m)	Y (m)	Elev (m)
1	Salam	711,092.00	3,874,754.00	892.00
2	Shahwali	711,603.59	3,874,329.90	966.00
3	Ahmad Khan	711,521.11	3,874,374.69	938.00
4	Abdul Matin	711,696.85	3,874,547.37	959.00
5	Alam Gul	711,613.87	3,874,522.14	920.00
6	Muhib Khan	711,481.00	3,874,197.00	947.00
7	Masihullah	711,466.04	3,874,462.80	920.00
8	Nurangul	711,405.00	3,874,402.00	926.00
9	Masjid	711,443.00	3,874,519.00	928.00
10	Jahanzib	711,766.00	3,874,808.00	901.00
11	Muhammad Shah	711,232.07	3,874,524.66	903.00
12	Hazerullah	711,139.00	3,874,475.00	904.00
13	Eisa Khan	711,206.66	3,874,548.94	903.00
14	Islamudin	711,147.12	3,874,525.90	892.00
15	Kashmir Khan	711,148.22	3,874,572.71	903.00
16	Haji Bahram	710,911.00	3,874,556.00	891.00
17	Zafar Khan	710,998.06	3,874,675.60	898.00
18	Wahid Gul	711,352.00	3,874,538.00	900.00
19	Zakirulah	711,148.00	3,874,430.00	890.00
20	Shakirullah	710,972.00	3,874,641.00	880.00

Project Name	Khanano Kas Village Water Solar Operated HH Pipe Scheme		BHA/IMC	
Designed by IMC-WASH-TEAM	Checked/Reviewed by ENG.M.YOUSUF_MAZHAR	Approved by HQ, Syed Yasir Ahmad	Date SEP/2022	Scale AS-SHOWN
Province	Kunar	HORIZONTAL_ALIGNMENT		
District	Asmar			
Village/CDC	Khanano kas	DRAWING#1	Edition 1ST_VERSION	Sheet SHEET_1

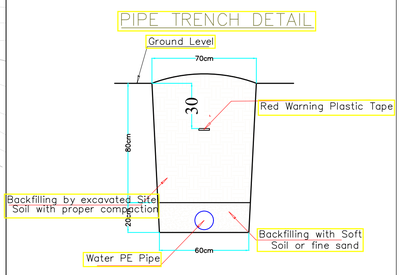

Infrastructures Location

S/N	Feature Name	Easting (M)	Northing (M)	Elevation (m)
1	Water Well	711,368.37	3,874,479.12	927
2	Water Tank	711,675.00	3,874,312.00	983

Note:
1. The unit used for length is meter and for diameter is ().
2. HDPE-100 Pipe, 16 Bar used for Ø20, Ø25 and Well-Tank pipes, and the HDPE-PE100, 10 Bars is using for larger sizes of the pipes, from032 and above (As per PE pipe standard Catalogue).
3. All diameter of PE pipe in drawing considered Outer diameter.
4. The design/drawing has been prepared based on GPS surveyed data, therefor the flow must be checked in some critical pressure zones and in case of issues should inform the design team for further technical guidance and follow ups.
5. The WASH Site engineer and contractor should adjust the Taps flow to design flow.
6. Arbitrary tap's connections are not allowed, so please avoid extra tap's connection, but in case of need please contact with the design team and then you can take further steps accordingly.

LEGEND

- Water Well+PV system
- Topographic (Contours Lines)
- Residential Area
- PE Pipe 100, PN10 Ø(OD) 160
- PE Pipe 100, PN10 Ø(OD) 140
- PE Pipe 100, PN10 Ø(OD) 125
- PE Pipe 100, PN10 Ø(OD) OD-110
- PE Pipe 100, PN10 Ø(OD) OD-90
- PE Pipe 100, PN10 Ø(OD) OD-75
- PE Pipe 100, PN10 Ø(OD) OD-63
- PE Pipe 100, PN10 Ø(OD) OD-50
- PE Pipe 100, PN10 Ø(OD) OD-40
- PE Pipe 100, PN16 Ø(OD) OD-32
- PE Pipe 100, PN16 Ø(OD) OD-25
- PE Pipe 100, PN16 Ø(OD) OD-20
- PE-PIPE FROM WELL-TANK
- STAND POST — TP#
- POINT (NODES) — J-#
- WATER TANK
- GATE VALVE BOX

PLAN OF 35CUM RCC RESERVOIR

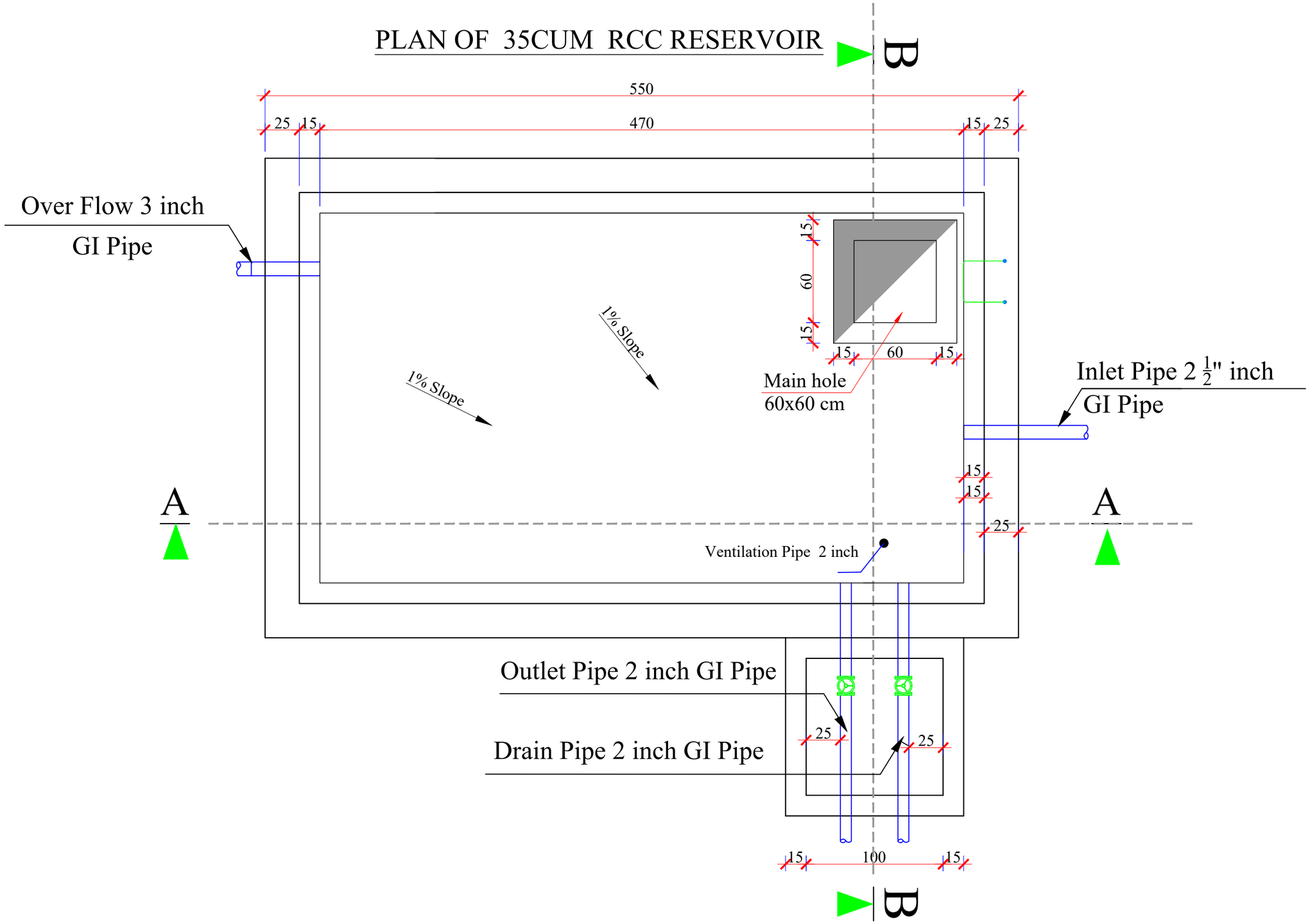

Funded by:	USAID / BHA	Drafted and Design BY:	IMC/WASH Team	Province	Kunar	Date	Sep/2022	Drawing Tile	G.W 35 M3 Tank
INTERNATIONAL MEDICAL CORPS (IMC) PROGRAM DEPARTMENT WASH UNIT		Review and Checked by:	Eng. Yousuf Mazhar	District	Asmar	Scale	A3-shown	Sheet Title	Front View
		Review and Approved by:	Eng. Mohammad Yasir	Village	Khanano kas	Unit	Centimeters	Sheet #	01

International Medical Corps

SECTION A-A

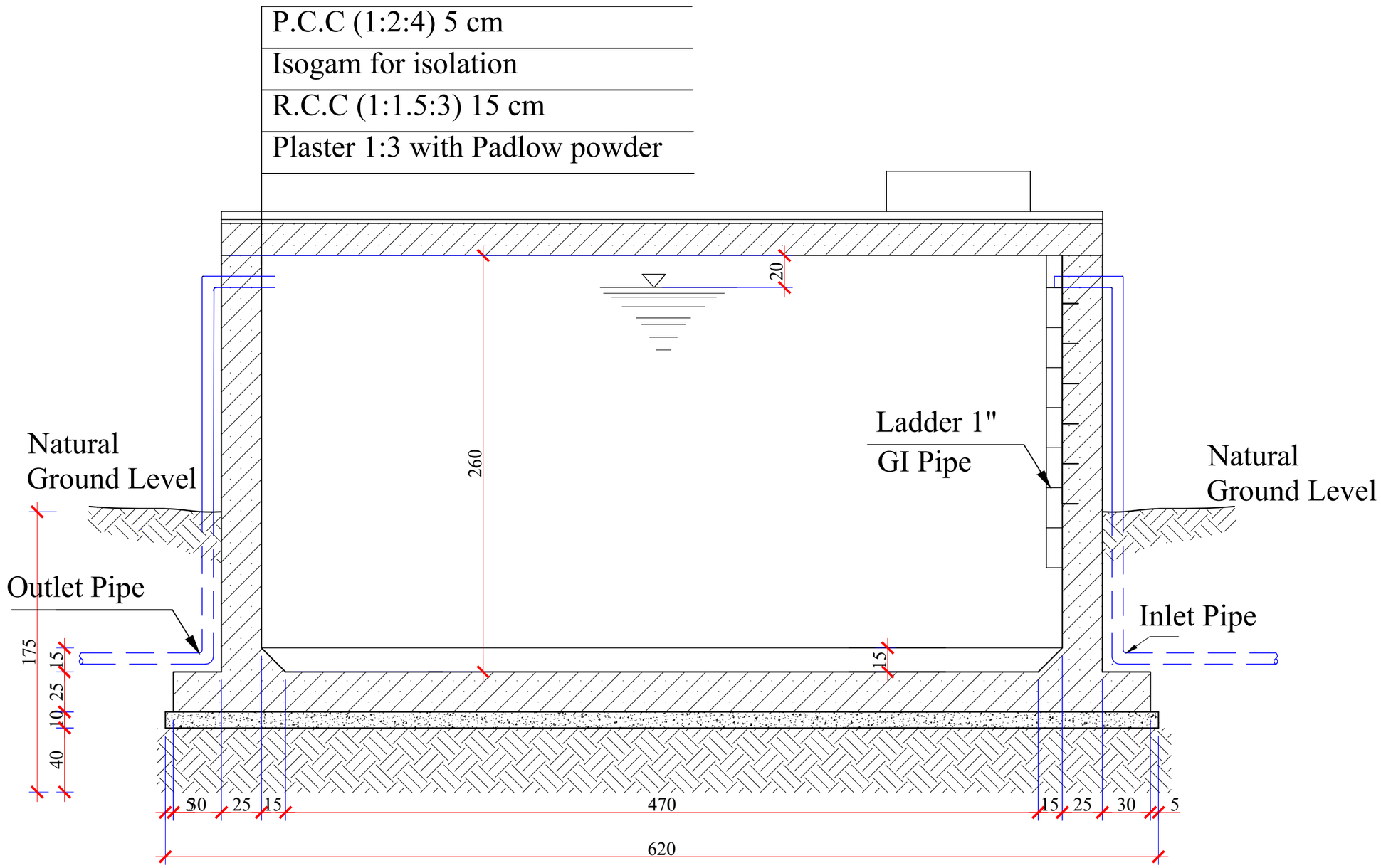

Funded by:	USAID / BHA	Drafted and Design BY:	IMC/WASH Team	Province	Kunar	Date	Sep/2022	Drawing Tile	Ground 35 M3 Tank
INTERNATIONAL MEDICAL CORPS (IMC) PROGRAM DEPARTMENT WASH UNIT		Review and Checked by:	Eng. Yousuf Mazhar	District	Asmar	Scale	A3-Shown	Sheet Title	Sections
		Review and Approved by:	Eng. Mohammad Yasir	Village	Khanao Kas	Unit	Centimeters	Sheet #	------

International Medical Corps

SECTION B-B

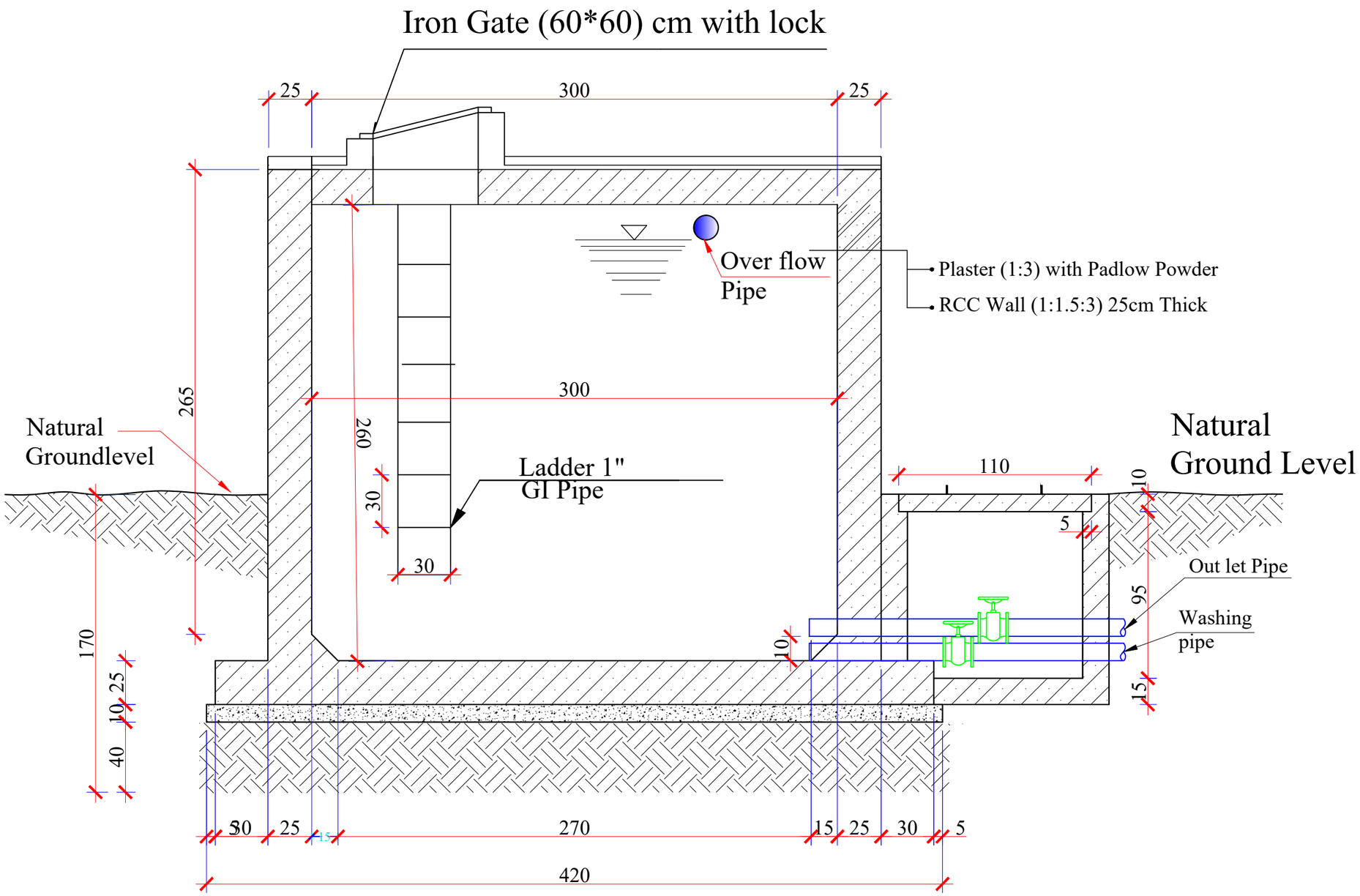

Funded by:	USAID / BHA	Drafted and Design BY:	IMC/WASH Team	Province	Kunar	Date	Sep/2022	Drawing Tile	Ground Tank 35 M3	International Medical Corps	
INTERNATIONAL MEDICAL CORPS (IMC) PROGRAM DEPARTMENT WASH UNIT		Review and Checked by:	Eng. Yousuf Mazhar	District	Asmar	Scale	A3-Shown	Sheet Title	Section (B-B)		
		Review and Approved by:	Eng. Mohammad Yasir	Village	Khanano kas	Unit	Centimeters	Sheet #	---------		

SECTION C-C

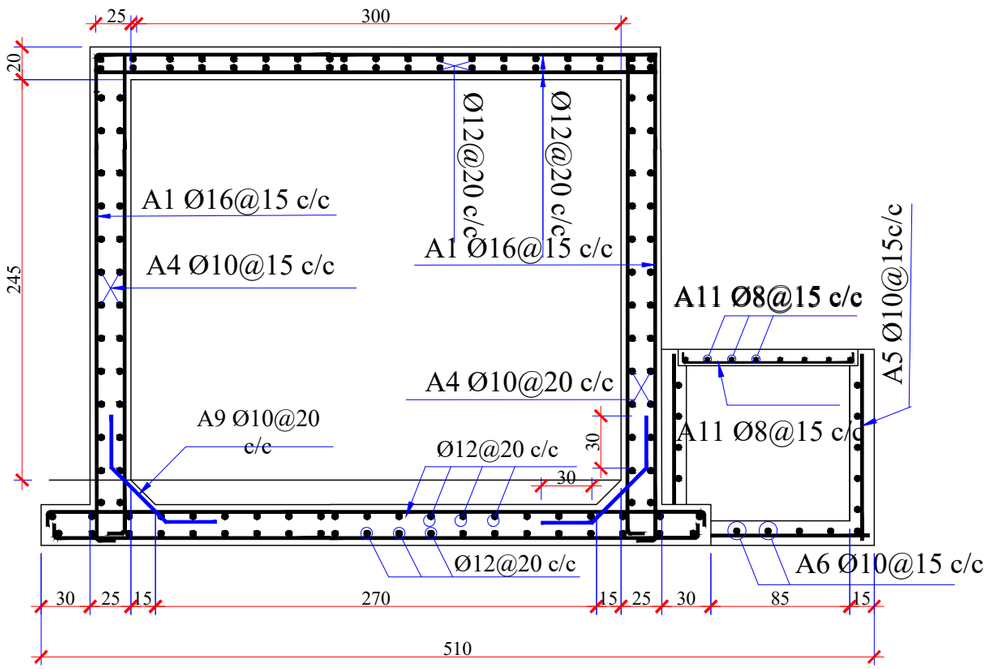

Steel Bar Bending Table						
Type	Shape & Size	Number	Length (M)	Total Length (M)	Unit weight (kg/m)	Total weight (kg)
A1 16 mm	300	154	3.34	514.36	1.58	812.69
A2 12 mm	300	94	3.34	313.96	0.89	279.42
A3 10 mm	350	55	3.84	211.20	0.617	130.31
A4 10 mm	550	55	5.84	321.20	0.617	198.18
A5 10 mm	115	35	1.30	45.50	0.617	28.07
A6 10 mm	125	35	1.39	48.65	0.617	30.01
A7 12 mm	600	43	6.34	272.62	0.89	242.63
A8 12mm	400	64	4.34	277.76	0.89	247.20
A9 10 mm	30 60 30	55	1.20	66.00	0.617	40.72
A10 16 mm	15 5 104 104 15	34	2.48	84.32	0.89	75.04
A11 8 mm	100	15	1.10	16.5	0.395	6.51

Funded by:	USID / BHA	Drafted and Design BY:	IMC/WASH Team	Province	Kunar	Date	Sep/2022	Drawing Tile	Ground Tank 35 m3
INTERNATIONAL MEDICAL CORPS (IMC) PROGRAM DEPARTMENT WASH UNIT		Review and Checked by:	Eng. Yousuf Mazhar	District	Asmar	Scale	A3-Shown	Sheet Title	Section (C-C)
		Review and Approved by:	Eng. Mohammad Yasir	Village	Khanano Kas	Unit	Centimeters	Sheet #	----------

International Medical Corps

SECTION D-D

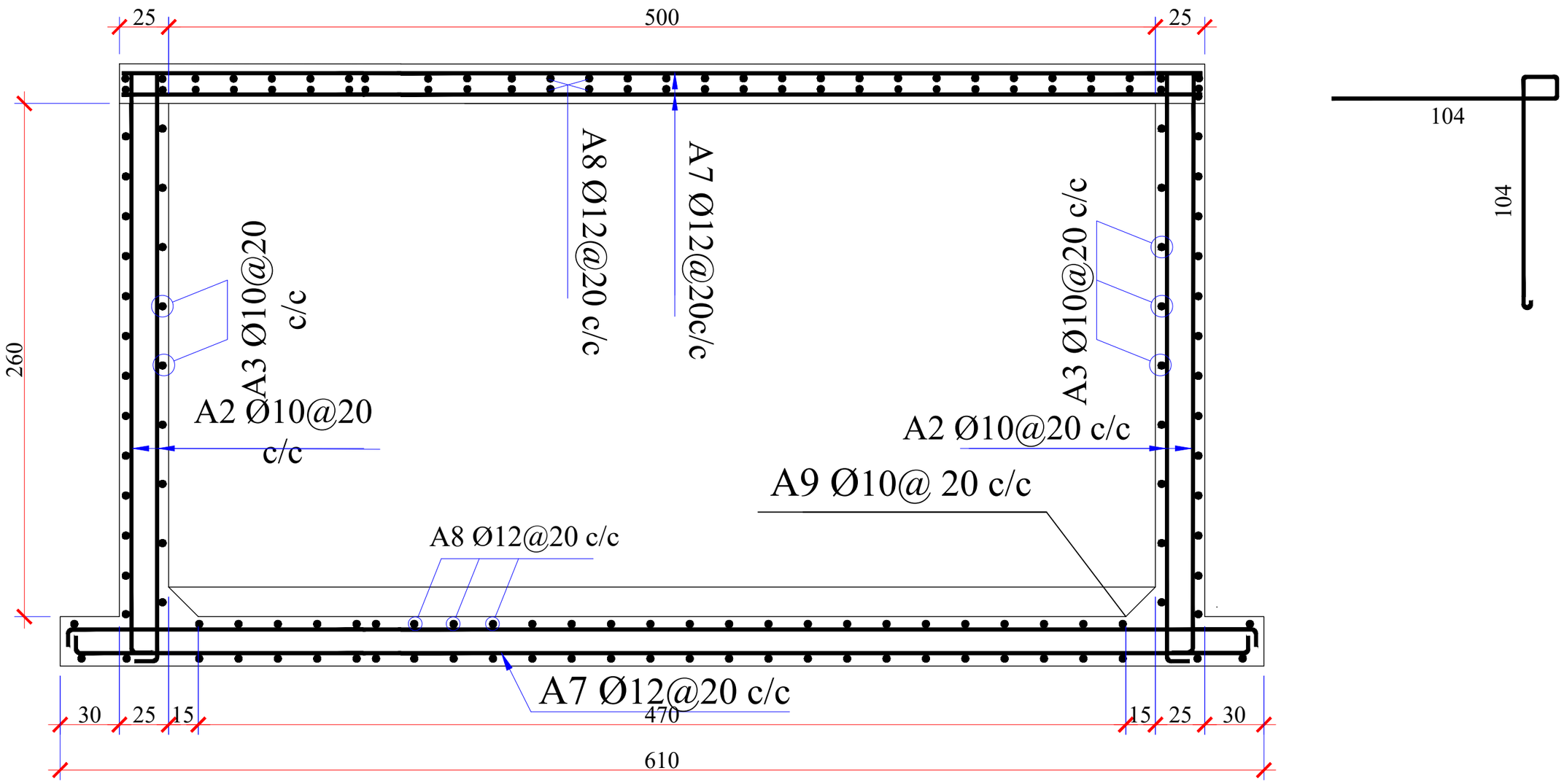

Funded by:	USAID / BHA	Drafted and Design BY:	IMC/WASH Team	Province	Kunar	Date	Sep/2022	Drawing Tile	Ground Water Tank 35M3	International Medical Corps
INTERNATIONAL MEDICAL CORPS (IMC) PROGRAM DEPARTMENT WASH UNIT		Review and Checked by:	Eng. Yousuf Mazhar	District	Asmar	Scale	A3-Shown	Sheet Title	Section (D-D)	
		Review and Approved by:	Eng. Mohammad Yasir	Village	Khanano Kas	Unit	Centimeters	Sheet #	----------	

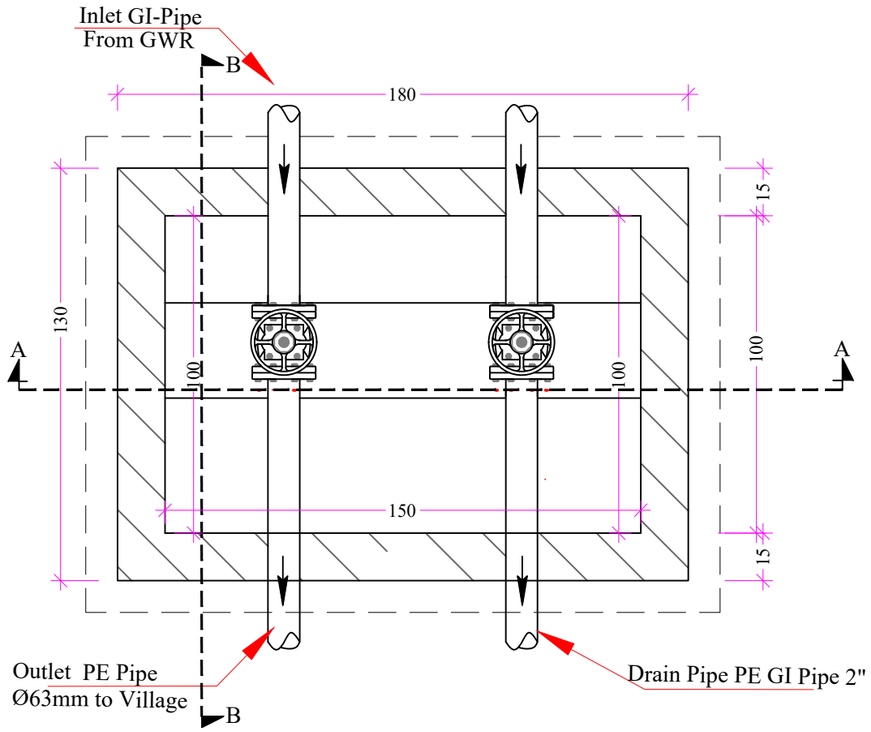

PLAN

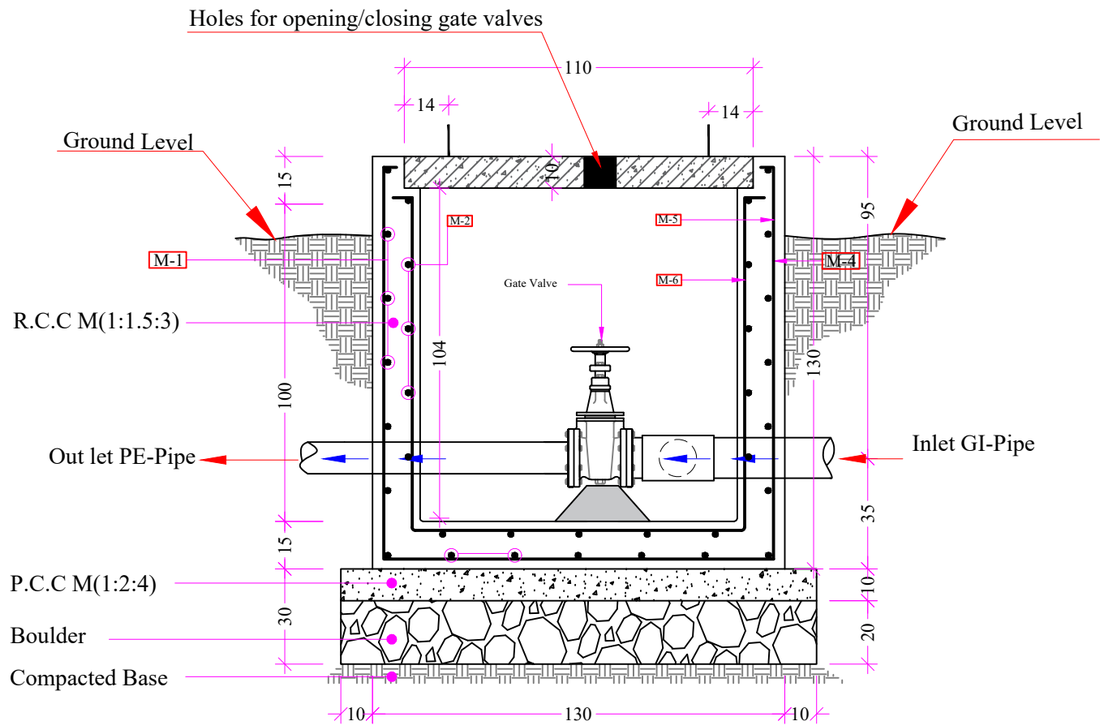

SECTION B-B

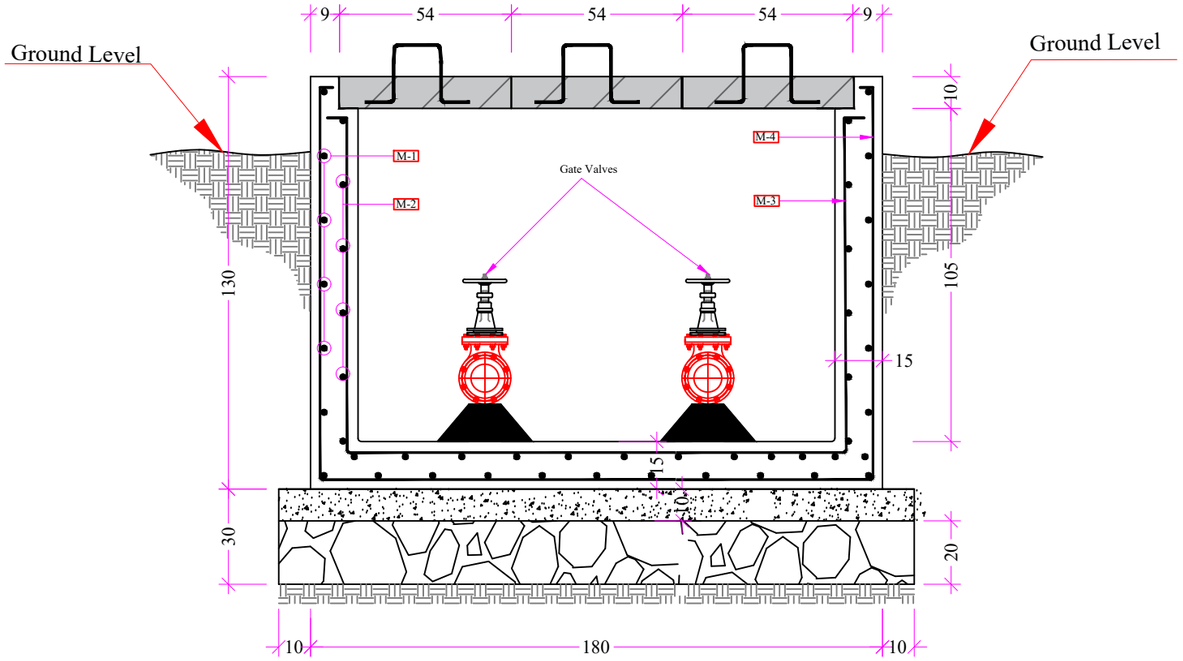

SECTION A-A

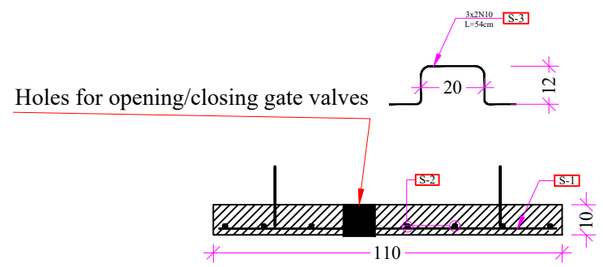

SECTION MS1-MS1

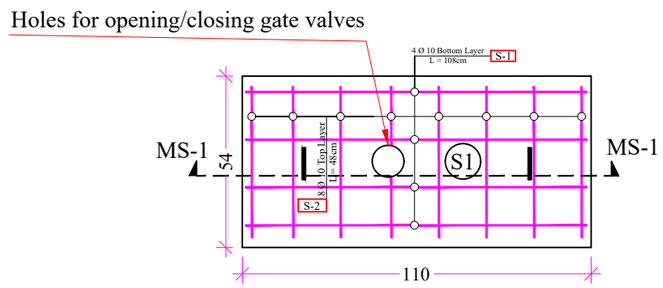

RCC SLAB PLAN

Funded by:	USAID/BHA	Drafted and Design BY:	IMC/WASH Team	Province	Kunar	Date	Sep/2022	Drawing Tile	Gate Valve
INTERNATIONAL MEDICAL CORPS (IMC) PROGRAM DEPARTMENT WASH UNIT		Review and Checked by:	Eng. Yousuf Mazhar	District	Asmar	Scale	A3-Shown	Sheet Title	Renfor. Plan
		Review and Approved by:	Eng. Mohammad Yasir	Village	Khanano Kas	Unit	Centimeters	Sheet #	---------

International Medical Corps

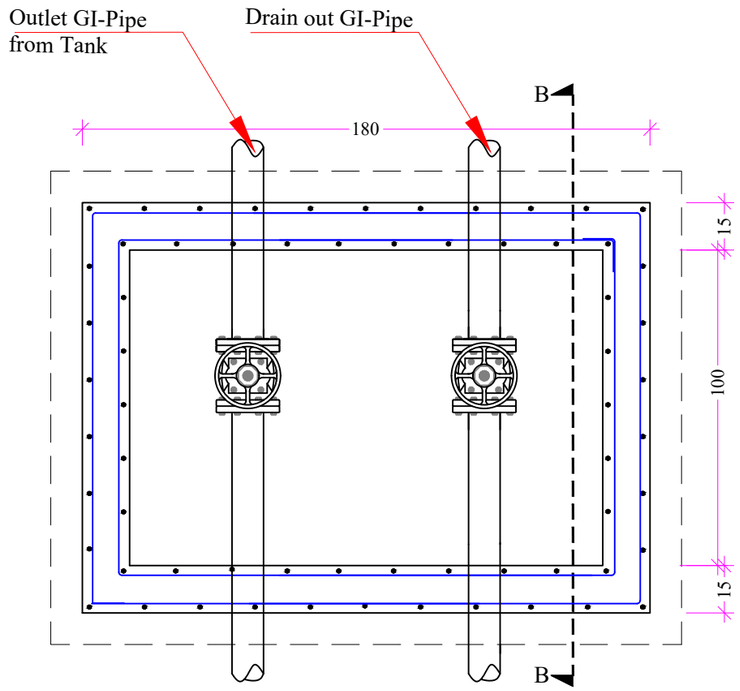

SECTIONAL PLAN OF RCC WALLS

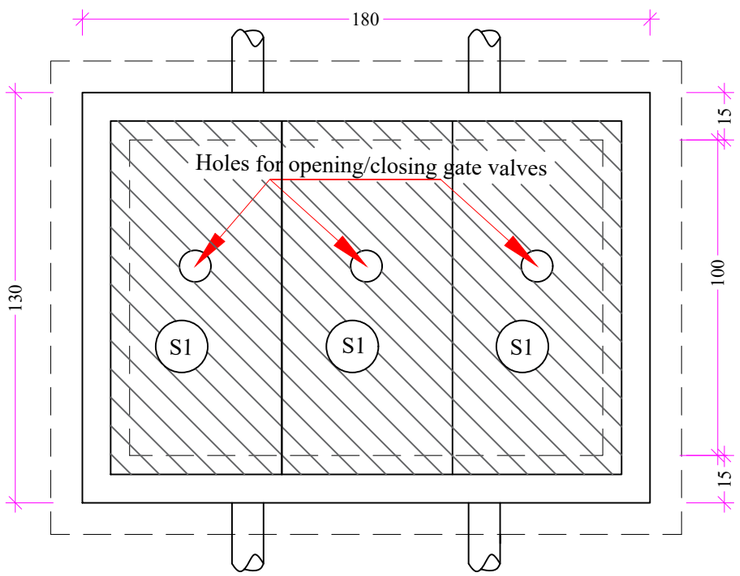

TOP VIEW

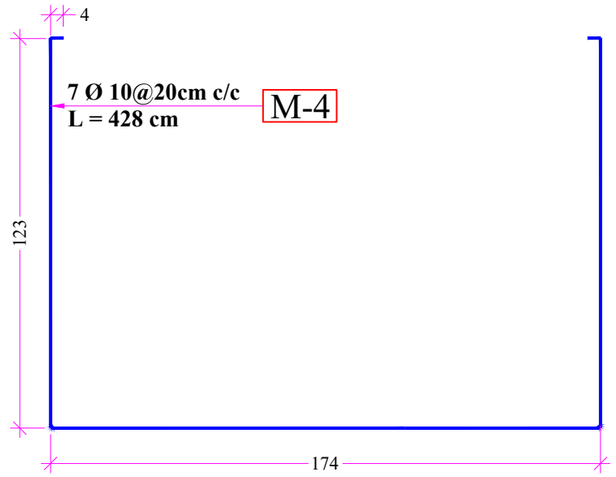

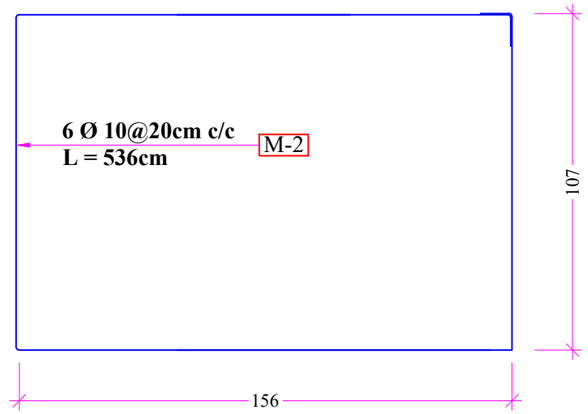

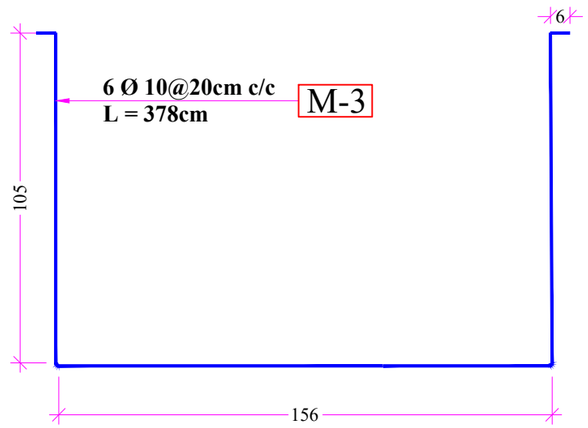

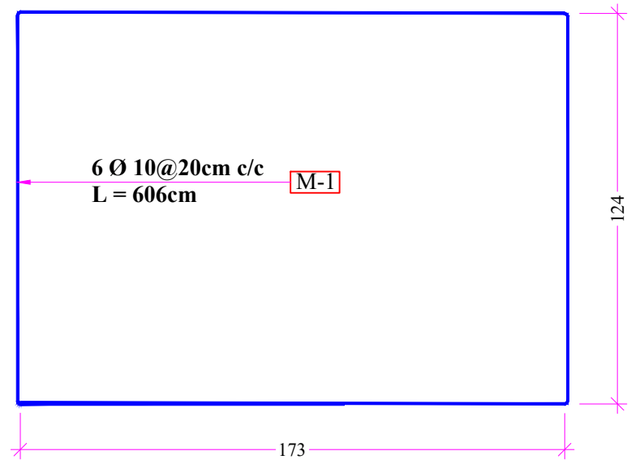

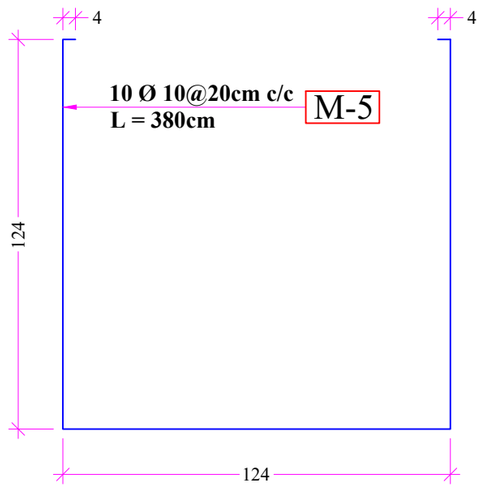

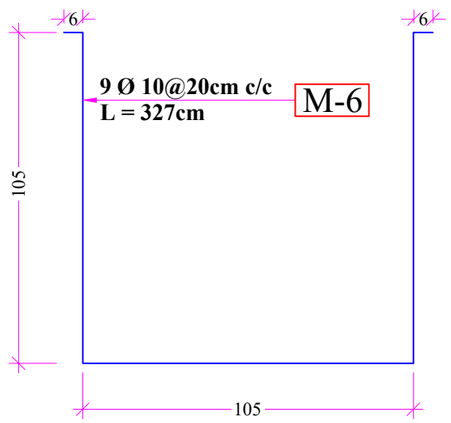

Funded by:	USAID/BHA	Drafted and Design BY:	IMC/WASH Team	Province	Kunar	Date	Sep/2022	Drawing Tile	Gate Valve
INTERNATIONAL MEDICAL CORPS (IMC) PROGRAM DEPARTMENT WASH UNIT		Review and Checked by:	Eng. Yousuf Mazhar	District	Asmar	Scale	A3-Shown	Sheet Title	Renfor. Plan
		Review and Approved by:	Eng. Mohammad Yasir	Village	Khanano Kas	Unit	Centimeters	Sheet #	---------

International Medical Corps

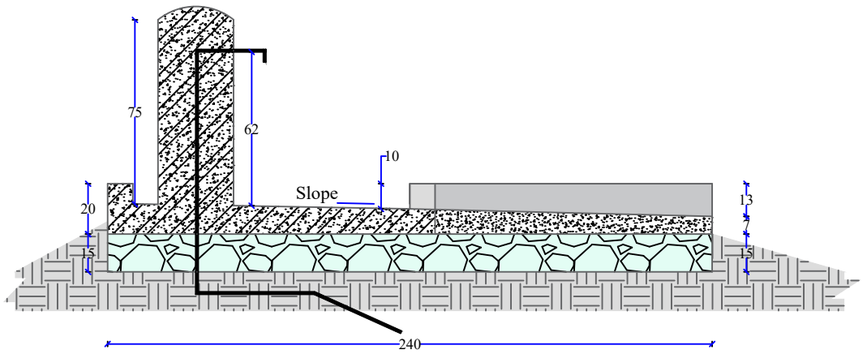

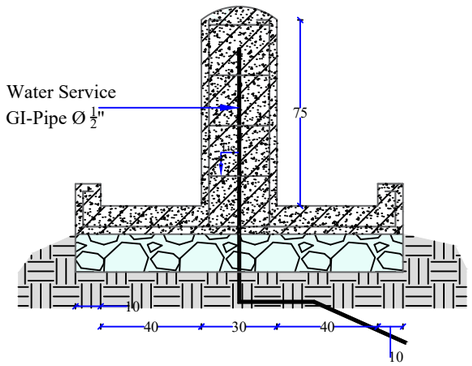

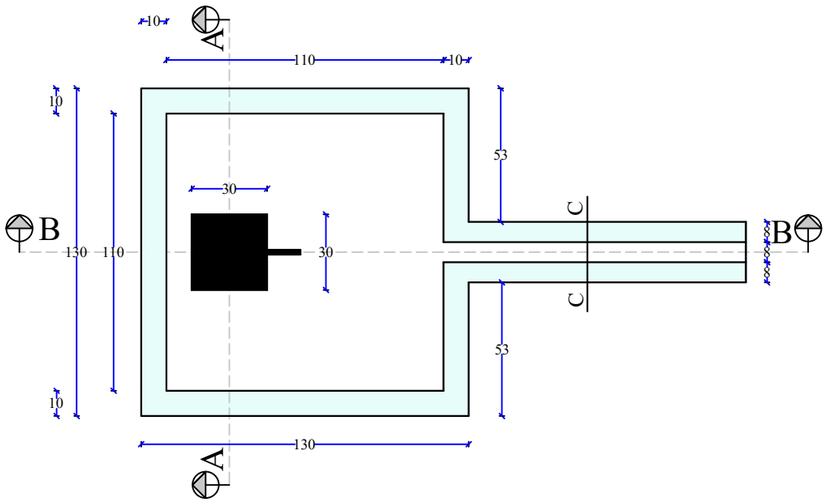

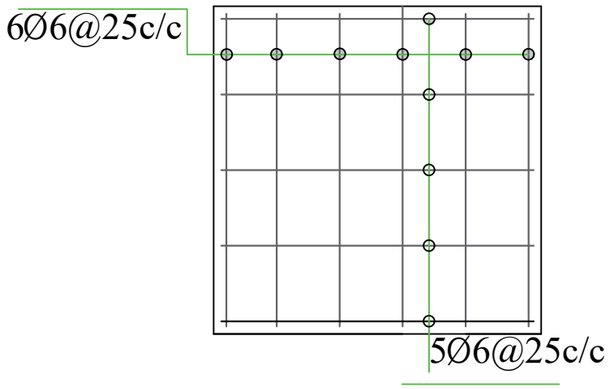

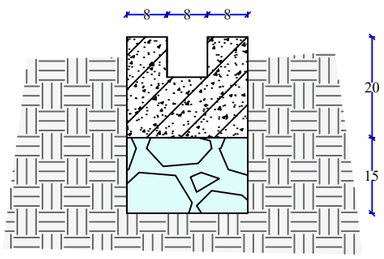

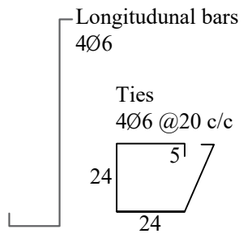

Tap Column reinfor...

Funded by:	USAID / BHA	Drafted and Design BY:	IMC/WASH Team	Province	Kunar	Date	Sep/2022	Drawing Tile	Stand Post
INTERNATIONAL MEDICAL CORPS (IMC) PROGRAM DEPARTMENT WASH UNIT		Review and Checked by:	Eng. Yousuf Mazhar	District	Asmar	Scale	A3-Shown	Sheet Title	Stand Post
		Review and Approved by:	Eng. Mohammad Yasir	Village	Khanano Kas	Unit	Centimeters	Sheet #	----------

International Medical Corps

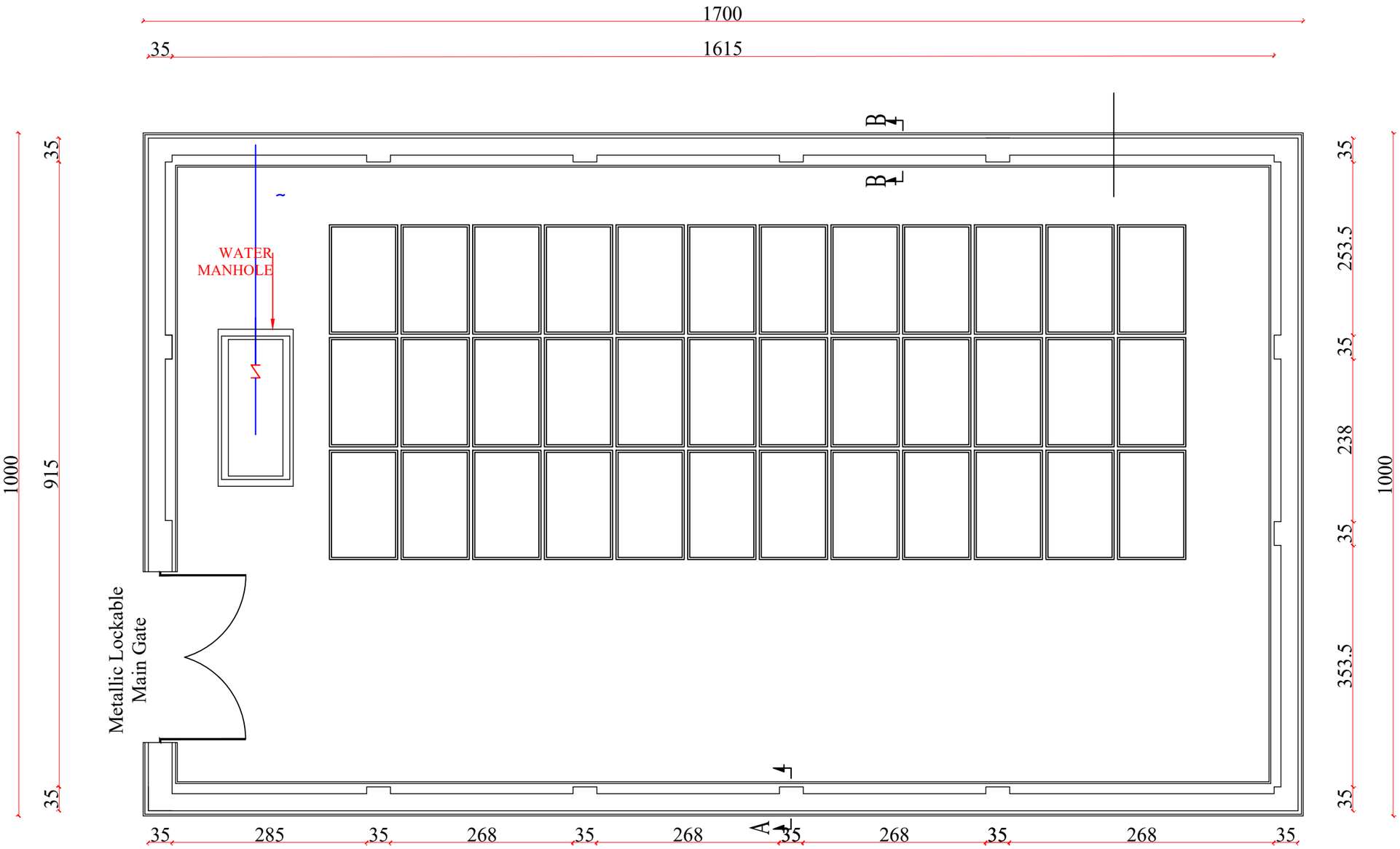

Boundary wall

Note:
1- All dimensions are in cm unless otherwise stated.
2- During RCC work vibrator must be used to avoid.
3- All PCC works should be with M200 mortar unless otherwise stated.
4- All RCC works should be with M250 mortar unless otherwise stated.
5- Brick masonary (1:4).
6- Curing must be continued upto 28 days.
7- Clear and Clean water must be used every where.

Funded by:	USAID / BHA	Drafted and Design BY:	IMC/WASH Team	Province	Kunar	Date	Sep/2022	Drawing Tile	Boundry Wall		
INTERNATIONAL MEDICAL CORPS (IMC) PROGRAM DEPARTMENT WASH UNIT		Review and Checked by:	Eng. Yousuf Mazhar	District	Asmar	Scale	A3-Shown	Sheet Title	Plan		
		Review and Approved by:	Eng. Mohammad Yasir	Village	Khanano Kas	Unit	Centimeters	Sheet #	----------		

International Medical Corps

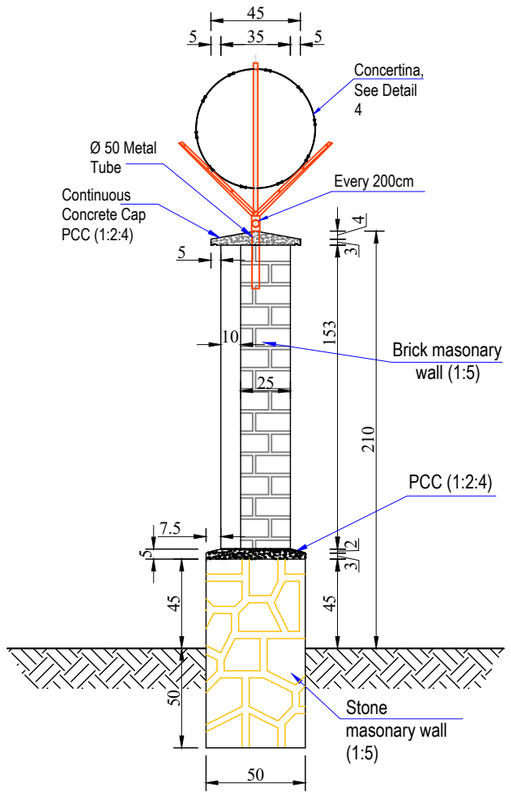

Section B-B

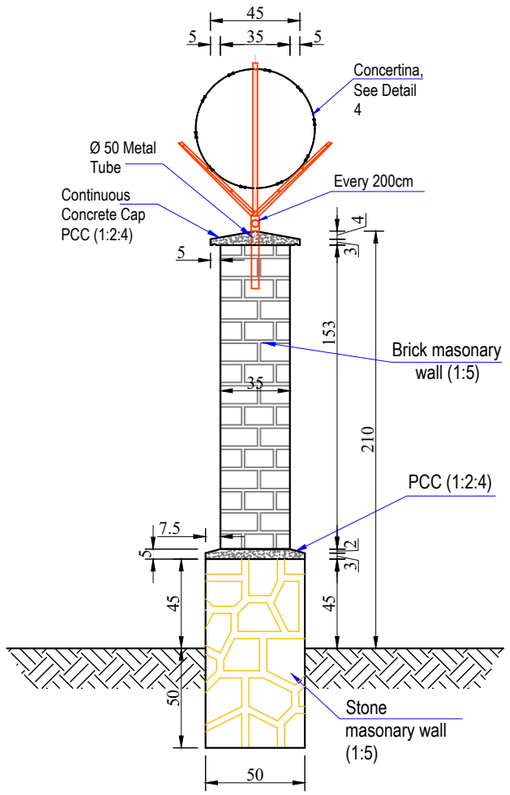

Section A-A

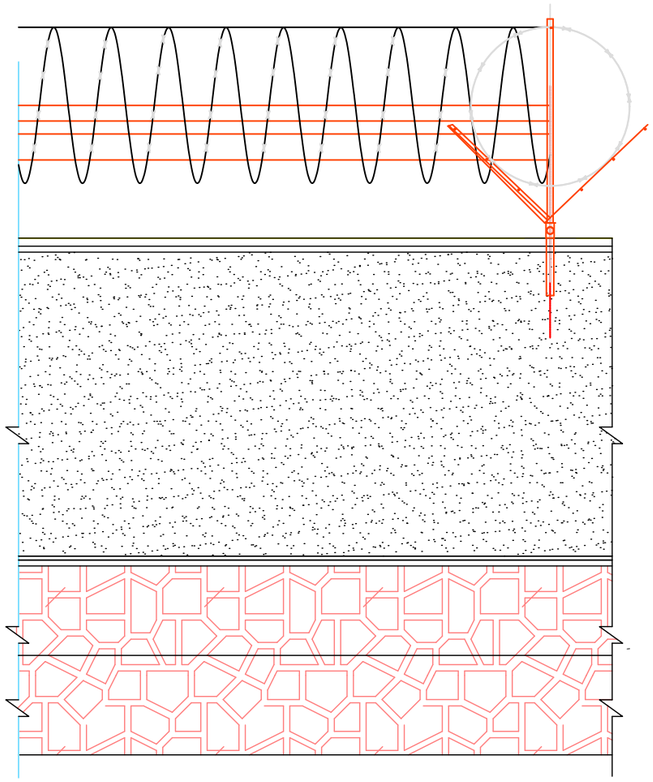

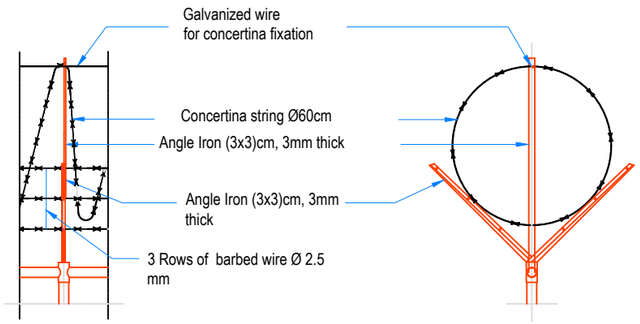

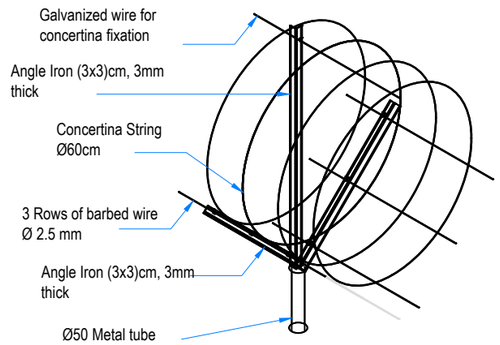

Isometric Concertina Detail

Funded by:	USAID / BHA	Drafted and Design BY:	IMC/WASH Team	Province	Kunar	Date	July/2022	Drawing Tile	Boundry wall
INTERNATIONAL MEDICAL CORPS (IMC) PROGRAM DEPARTMENT WASH UNIT		Review and Checked by:	Eng. Yousuf Mazhar	District	Asmar	Scale	A3-Shown	Sheet Title	Front View+Section
		Review and Approved by:	Eng. Mohammad Yasir	Village	Khanano Kas	Unit	Centimeters	Sheet #	----------

International Medical Corps

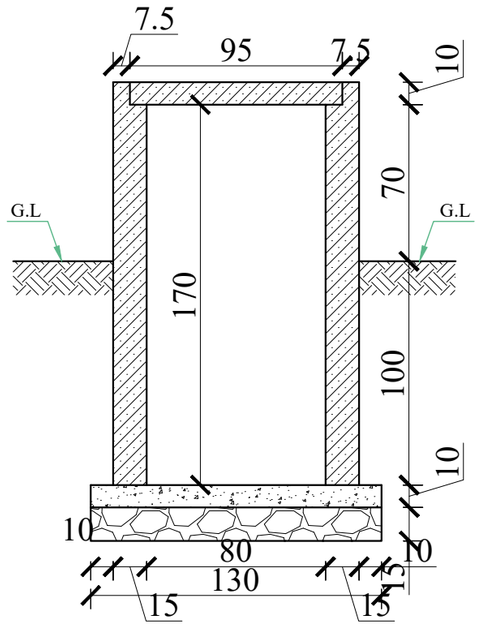

Section A-A

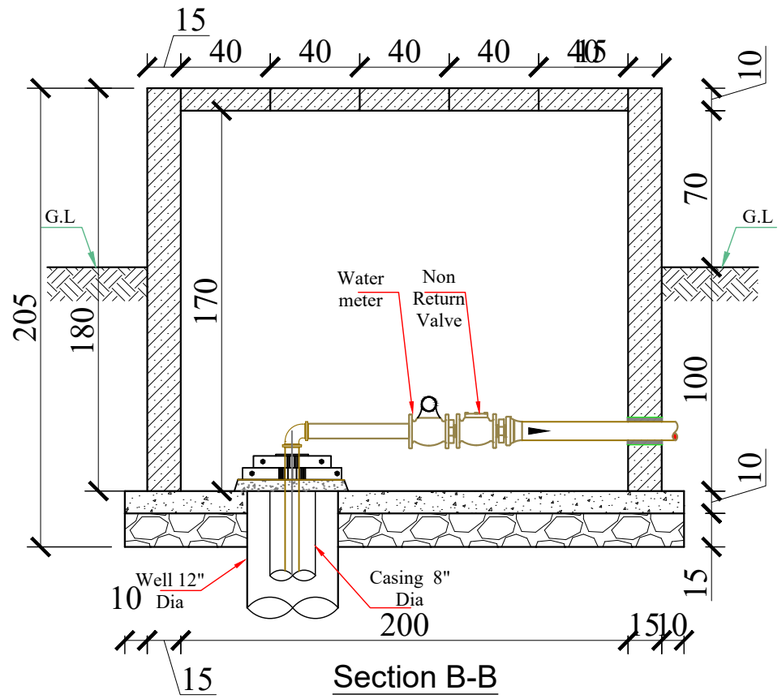

Section B-B

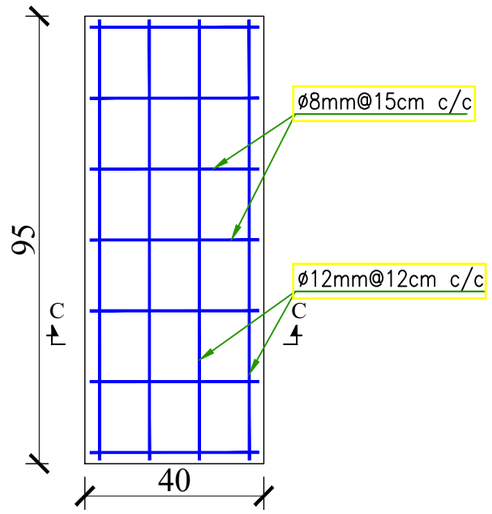

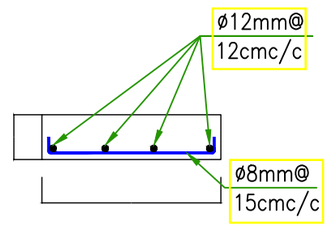

Section C - C

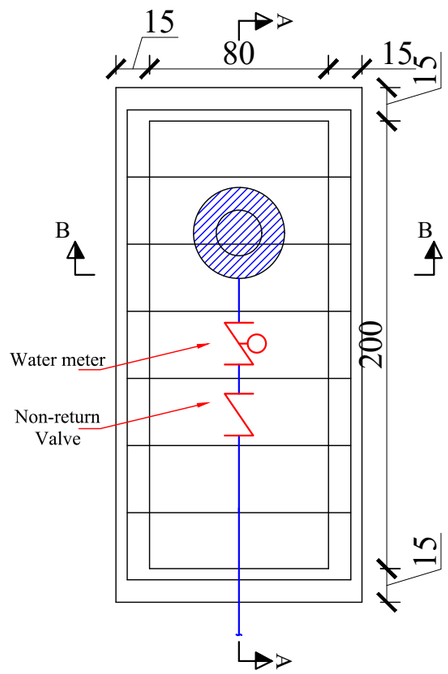

Well Protection Plan

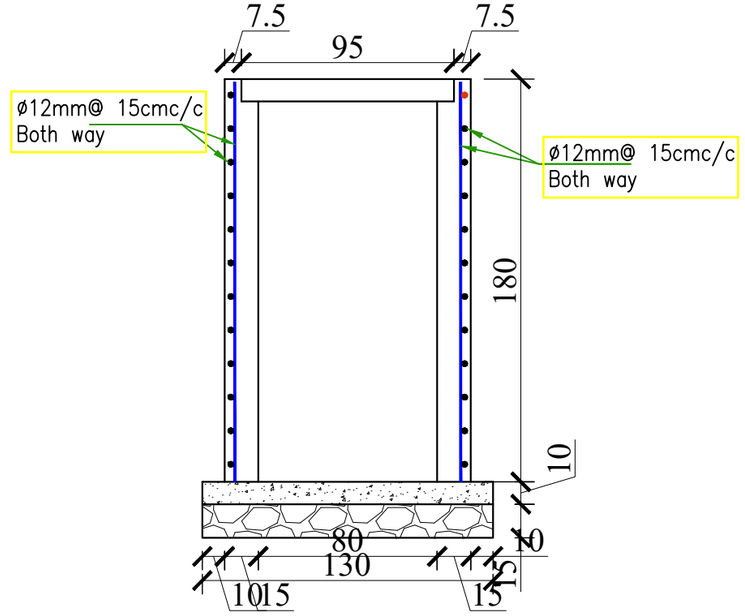

Wall Reinforcement

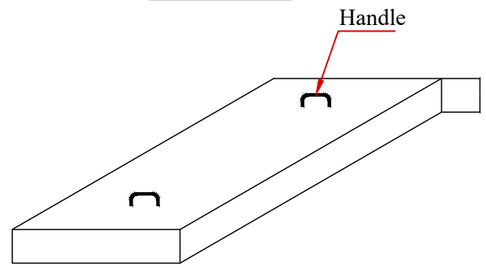

RCC Slab

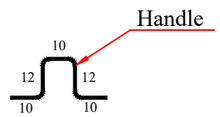

Handle

Funded by:	USAID/BHA	Drafted and Design BY:	IMC/WASH Team	Province	Kunar	Date	Sep/2022	Drawing Tile	Well Development
INTERNATIONAL MEDICAL CORPS (IMC) PROGRAM DEPARTMENT WASH UNIT		Review and Checked by:	Eng. Yousuf Mazhar	District	Asmar	Scale	A3-Shown	Sheet Title	Sections and details
		Review and Approved by:	Eng. Mohammad Yasir	Village	Khanano Kas	Unit	Centimeters	Sheet #	----------

International Medical Corps

Note:

1-RCC Concrete Footing and Column M(1:1.5:3).
2-J-Anchor Bolt 16mm.
3-Deformed Grade 60 steel bar Dia.10mm according to drawing.
4-Steel angle iron (2"x2"x4mm).
5-Steel girder mini. sizing (10cmx4.5cmx8mm).
PCC M(1:2:4).
Foundation Compacted 95%.
Potable water used.

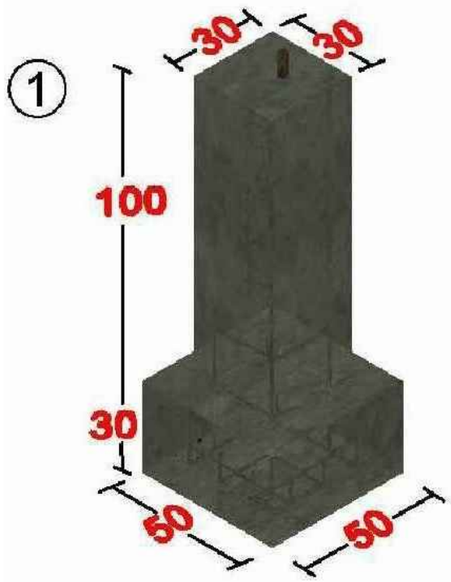

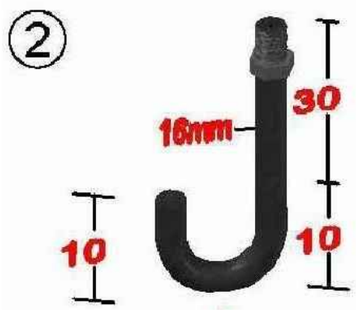

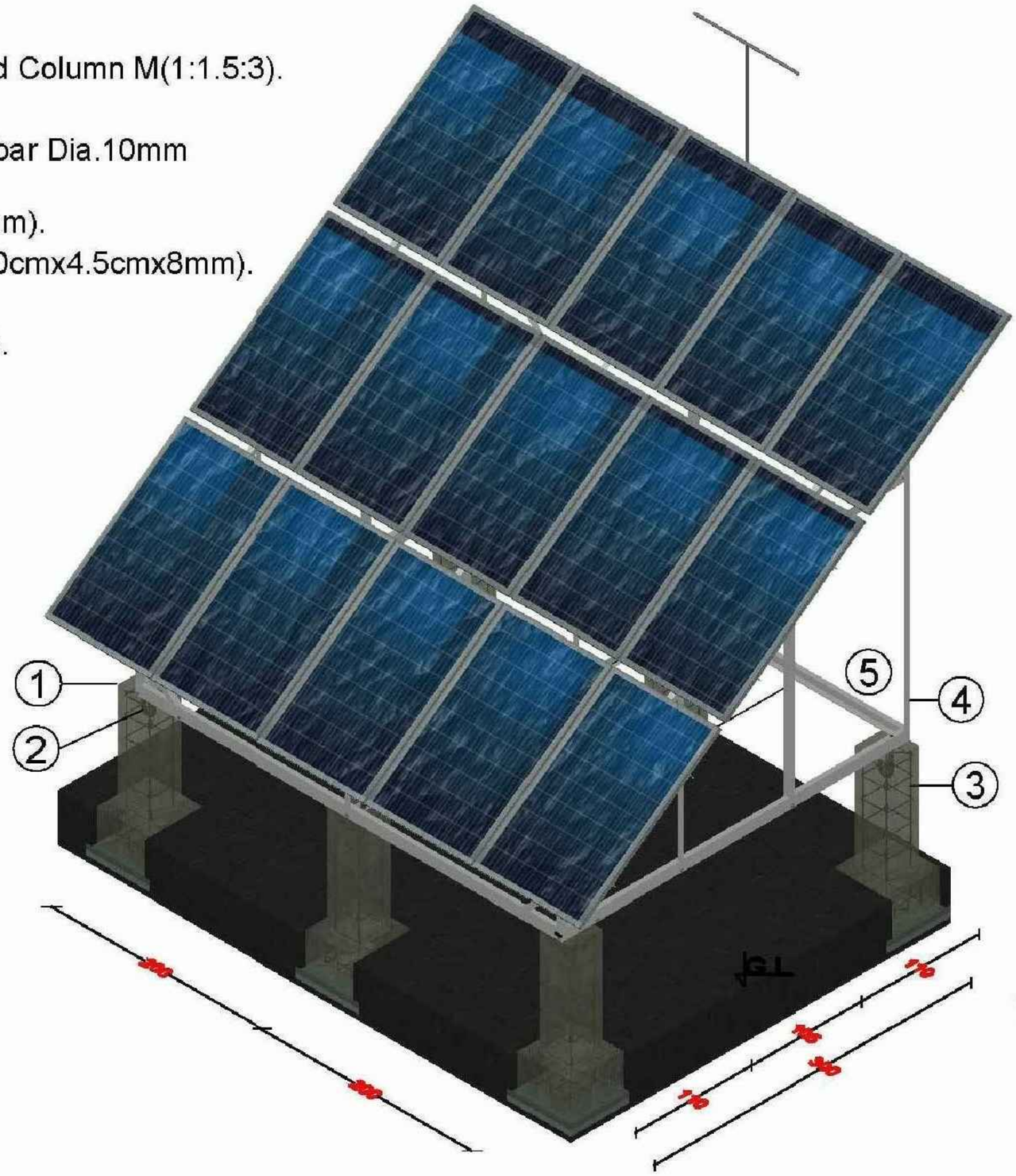

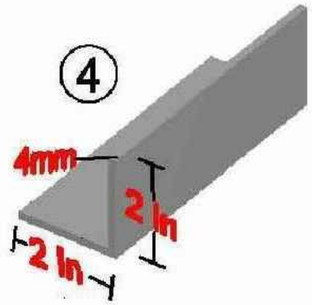

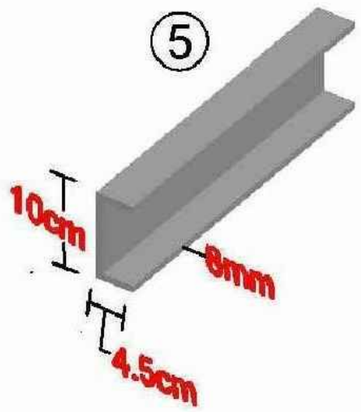

Funded by:	USAID/BHA	Drafted and Design BY:	IMC/WASH Team	Province	Kunar	Date	Sep/2022	Drawing Tile	Solar Frame	International Medical Corps	
INTERNATIONAL MEDICAL CORPS (IMC) PROGRAM DEPARTMENT WASH UNIT		Review and Checked by:	Eng. Yousuf Mazhar	District	Asmar	Scale	A3-Shown	Sheet Title	Frame 3 D		
		Review and Approved by:	Eng. Mohammad Yasir	Village	Khanano Kas	Unit	Centimeters	Sheet #	-----		

A1

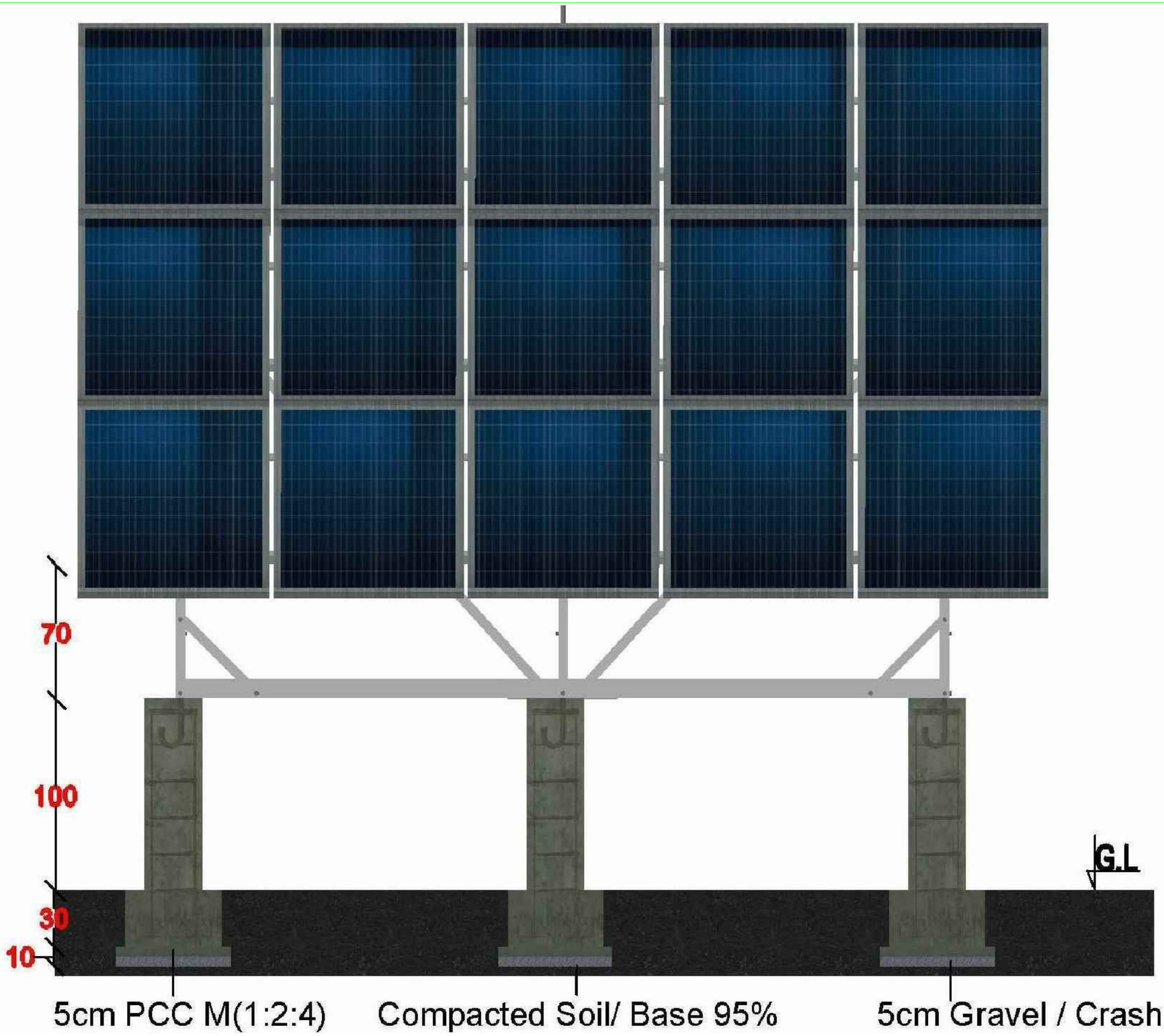

Funded by:	USAID/BHA	Drafted and Design BY:	IMC/WASH Team	Province	Kunar	Date	Sep/2022	Drawing Tile	Solar Frame	International Medical Corps	
INTERNATIONAL MEDICAL CORPS (IMC) PROGRAM DEPARTMENT WASH UNIT		Review and Checked by:	Eng. Yousuf Mazhar	District	Asmar	Scale	A3-Shown	Sheet Title	Fron View		
		Review and Approved by:	Eng. Mohammad Yasir	Village	Khanano Kas	Unit	Centimeters	Sheet #	----------		

Angle Θ = According to bidder solar system design

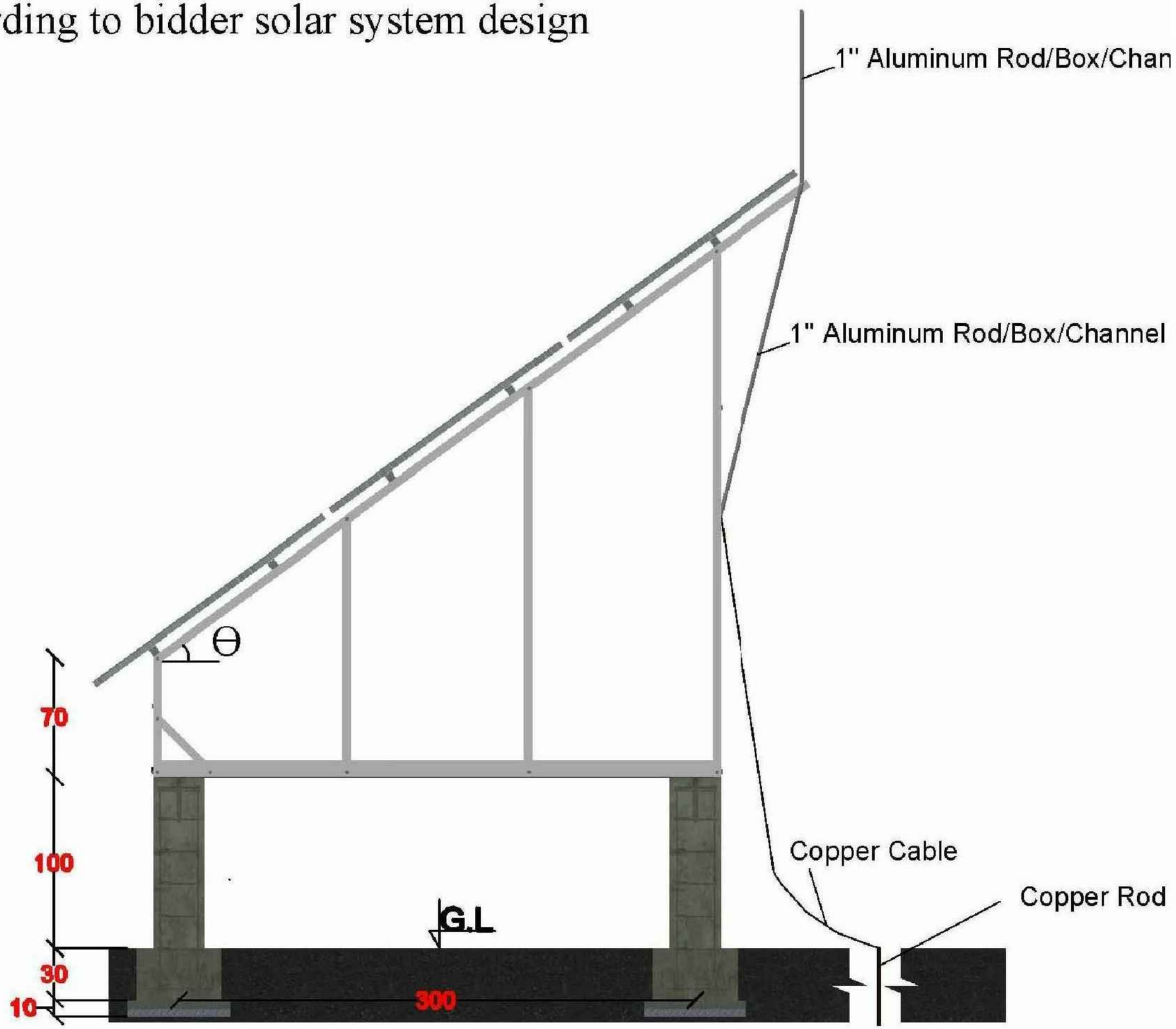

Funded by:	USAID/BHA	Drafted and Design BY:	IMC/WASH Team	Province	Kunar	Date	Sep/2022	Drawing Tile	Solar Frame	International Medical Corps
INTERNATIONAL MEDICAL CORPS (IMC) PROGRAM DEPARTMENT WASH UNIT		Review and Checked by:	Eng. Yousuf Mazhar	District	Asmar	Scale	A3-Shown	Sheet Title	Side View	
		Review and Approved by:	Eng. Mohammad Yasir	Village	Khanano Kas	Unit	Centimeters	Sheet #	----------	

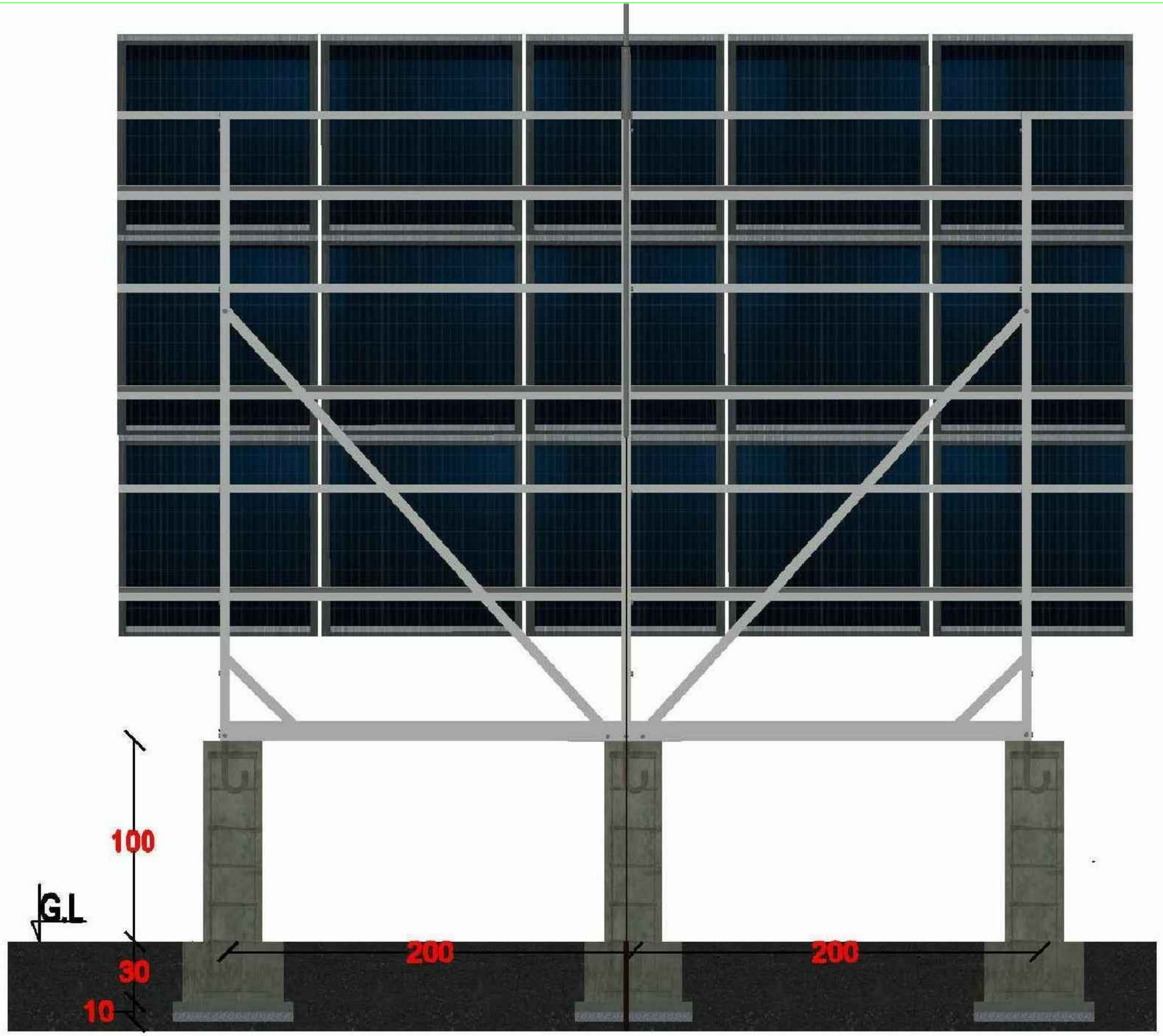

Funded by:	USAID/BHA	Drafted and Design BY:	IMC/WASH Team	Province	Kunar	Date	Sep/2022	Drawing Tile	Solar Frame
INTERNATIONAL MEDICAL CORPS (IMC) PROGRAM DEPARTMENT WASH UNIT		Review and Checked by:	Eng. Yousuf Mazhar	District	Asmar	Scale	A3-Shown	Sheet Title	Back View
		Review and Approved by:	Eng. Mohammad Yasir	Village	Khanano Kas	Unit	Centimeters	Sheet #	----------

International Medical Corps