INTERNATIONAL MEDICAL CORPS
WASH PROGRAM
SHAMAKAT SOLAR POWERED WATER SUPPLY PROJECT

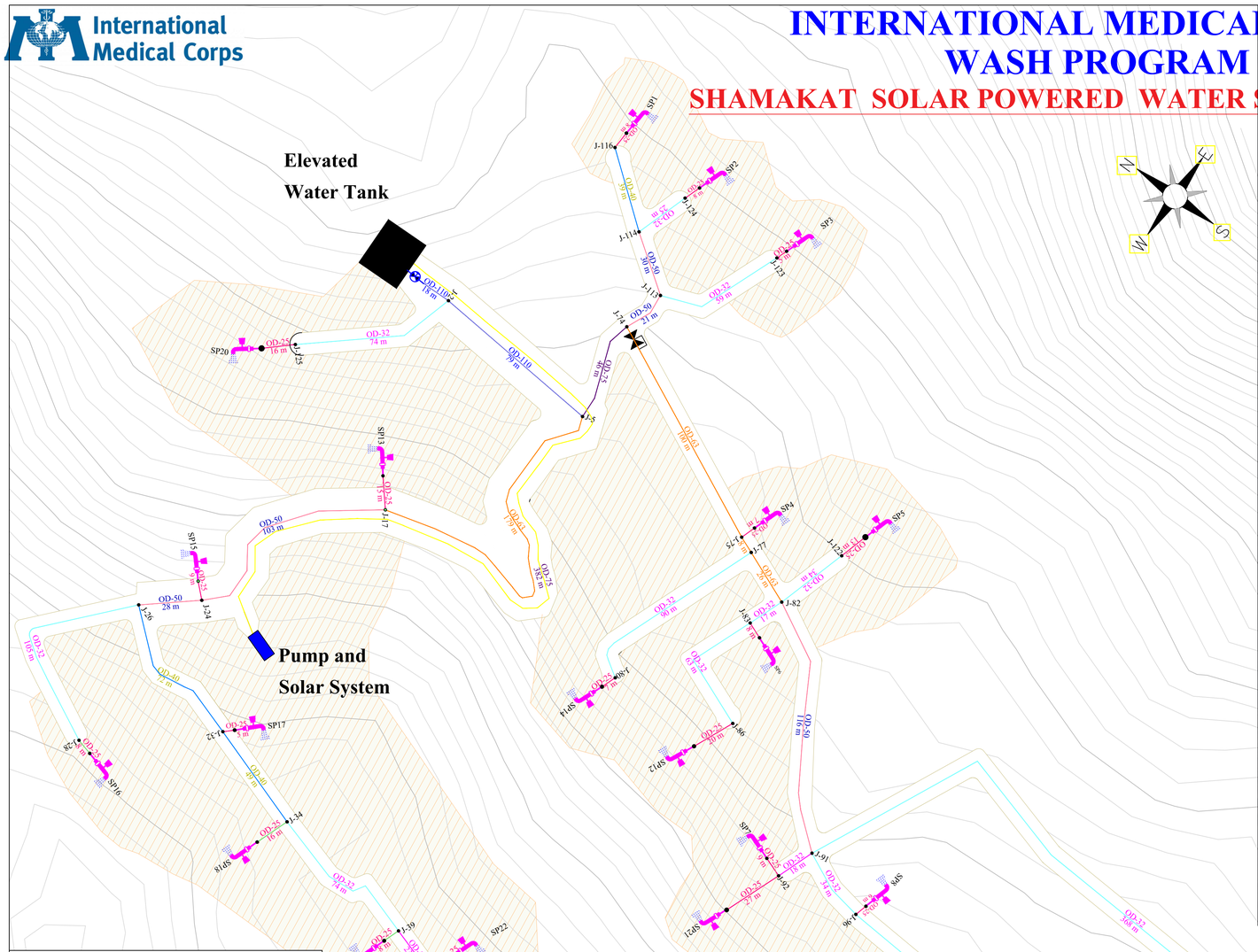

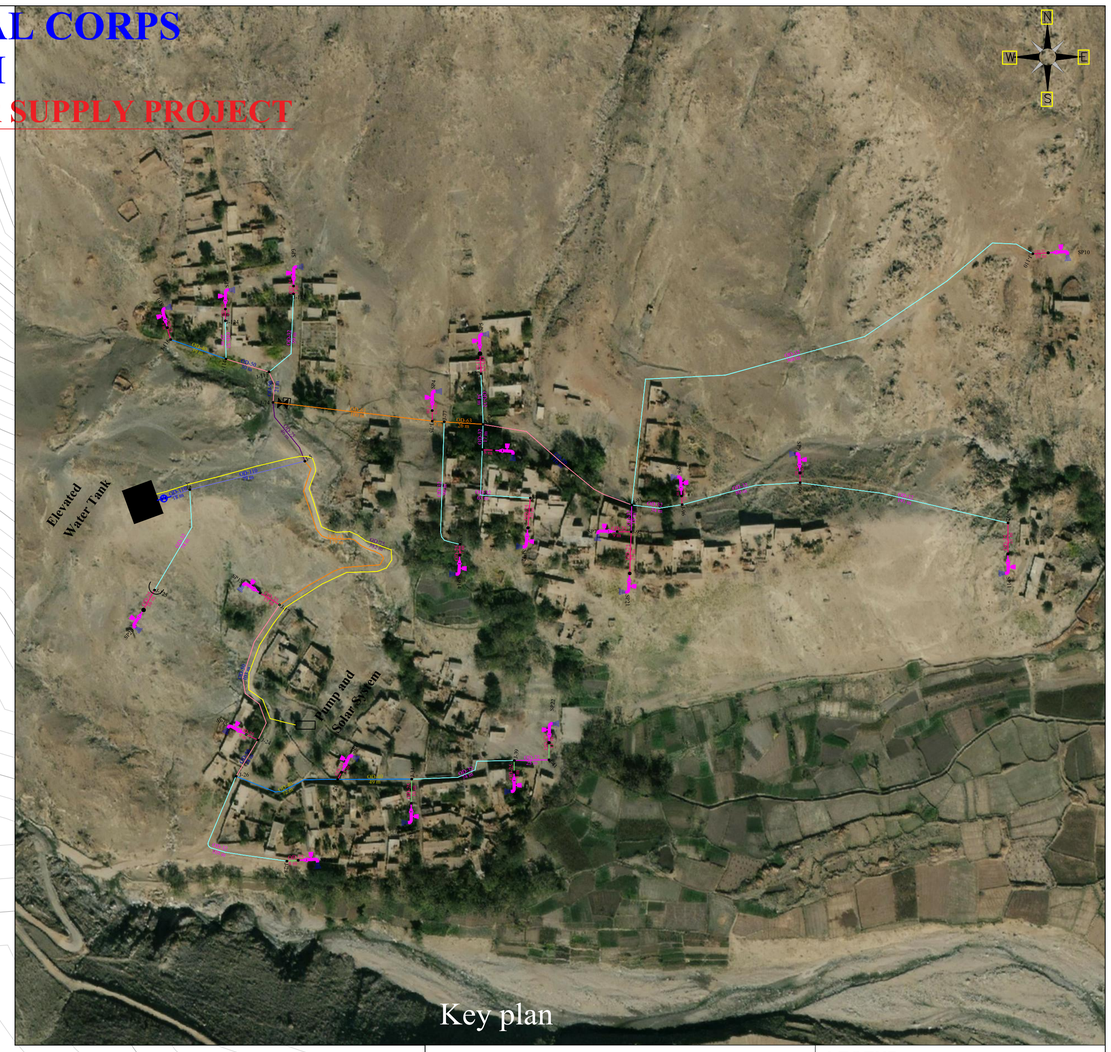

Stand post information

Tp #	House Hold Name	Tap coordinates		
		X (m)	Y (m)	Elev (m)
1	Ezatullah	595,411.97	3,844,075.87	1,250.06
2	M. Nazeem	595,450.67	3,844,088.24	1,249.64
3	Qari Hijrat	595,496.02	3,844,103.58	1,249.96
4	Zabardeen	595,588.20	3,844,020.75	1,237.74
5	Abdul Aziz	595,620.00	3,844,058.57	1,241.27
6	Zabardast	595,629.29	3,843,994.34	1,234.99
7	Hazrat Gul	595,711.21	3,843,940.30	1,226.39
8	Haji Jabar	595,754.06	3,843,963.91	1,225.43
9	Ghuncha Gul	595,832.84	3,843,979.25	1,227.23
10	Mohammadul	595,997.91	3,844,125.60	1,226.62
11	Faqir Mohamr	595,971.14	3,843,925.36	1,202.19
12	Saed Mohamr	595,651.84	3,843,942.70	1,227.63
13	Saed Deen	595,473.74	3,843,899.41	1,223.89
14	Usman	595,606.58	3,843,924.64	1,226.72
15	Mosa Khan	595,464.43	3,843,805.27	1,210.05
16	Taza Gul	595,499.06	3,843,721.64	1,190.11
17	Zafar Khan	595,527.89	3,843,780.22	1,198.54
18	Wulas	595,574.26	3,843,759.56	1,194.27
19	Sarwar	595,642.72	3,843,780.28	1,196.48
20	Awbaz	595,395.96	3,843,887.62	1,235.78
21	Rafiullah	595,719.59	3,843,912.58	1,219.76
22	Imam	595,665.99	3,843,799.84	1,196.95

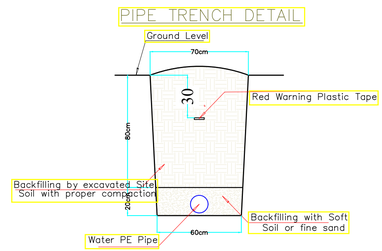

Infrastructures Location

S/N	Feature Name	Easting (M)	Northing (M)	Elevation (m)
1	Water Well	595,493.07	3,843,812.44	1207
2	Water Tank	595,409.62	3,843,964.17	1245

Note:
1. The unit used for length is meter and for diameter is ().
2. HDPE-100 Pipe, 16 Bar used for Ø20, Ø25 and Well-Tank pipes, and the HDPE-PE100, 10 Bars is using for larger sizes of the pipes, from032 and above (As per PE pipe standard Catalogue).
3. All diameter of PE pipe in drawing considered Outer diameter.
4. The design/drawing has been prepared based on GPS surveyed data, therefor the flow must be checked in some critical pressure zones and in case of issues should inform the design team for further technical guidance and follow ups.
5. The WASH Site engineer and contractor should adjust the Taps flow to design flow.
6. Arbitrary tap's connections are not allowed, so please avoid extra tap's connection, but in case of need please contact with the design team and then you can take further steps accordingly.

LEGEND

- Water Well+PV system
- Topographic (Contours Lines)
- Residential Area
- PE Pipe 100, PN10 Ø(OD) 160
- PE Pipe 100, PN10 Ø(OD) 140
- PE Pipe 100, PN10 Ø(OD) 125
- PE Pipe 100, PN10 Ø(OD) OD-110
- PE Pipe 100, PN10 Ø(OD) OD-90
- PE Pipe 100, PN10 Ø(OD) OD-75
- PE Pipe 100, PN10 Ø(OD) OD-63
- PE Pipe 100, PN10 Ø(OD) OD-50
- PE Pipe 100, PN10 Ø(OD) OD-40
- PE Pipe 100, PN16 Ø(OD) OD-32
- PE Pipe 100, PN16 Ø(OD) OD-25
- PE Pipe 100, PN16 Ø(OD) OD-20
- PE-PIPE FROM WELL-TANK
- STAND POST — TP#
- POINT (NODES) — J-#
- WATER TANK
- GATE VALVE BOX

Project Name	Shamakat Village Water Solar Operated HH Pipe Scheme		BHA/IMC	
Designed by IMC/WASH-TEAM	Checked/Reviewed by ENG.M.YOUSUF_MAZHAR	Approved by HQ, Syed Yasir Ahmad	Date SEP/2022	Scale AS-SHOWN
Province	Laghman	HORIZONTAL_ALIGNMENT		
District	Alishing			
Village/CDC	Shamakat	DRAWING#1	Edition 1ST_VERSION	Sheet SHEET_1

Note:

- All dimension are in cm.
- Mark of concrete M(1:1.5:3).
- Mark of Plain concrete PCC M(1:2:4)
- Safe bearing capacity of Soil in foundation is not less then 2 kg/cm2.
- Steel bar Mark Grade not less then 60 Kips.
- Plastering work of Elevated Tank & boundary Wall with M(1:4) cement + sand mortar.
- Out let pipe and Suction pipe should be protected (Isolation) with GI iron sheet.
- Inside plastering of Elevated Tank is two times with M(1:4) cement + sand mortar first time and second time M(1:1:1) cement + marble powder + zero # stone (Cheps) mortar due to not leakages in the future

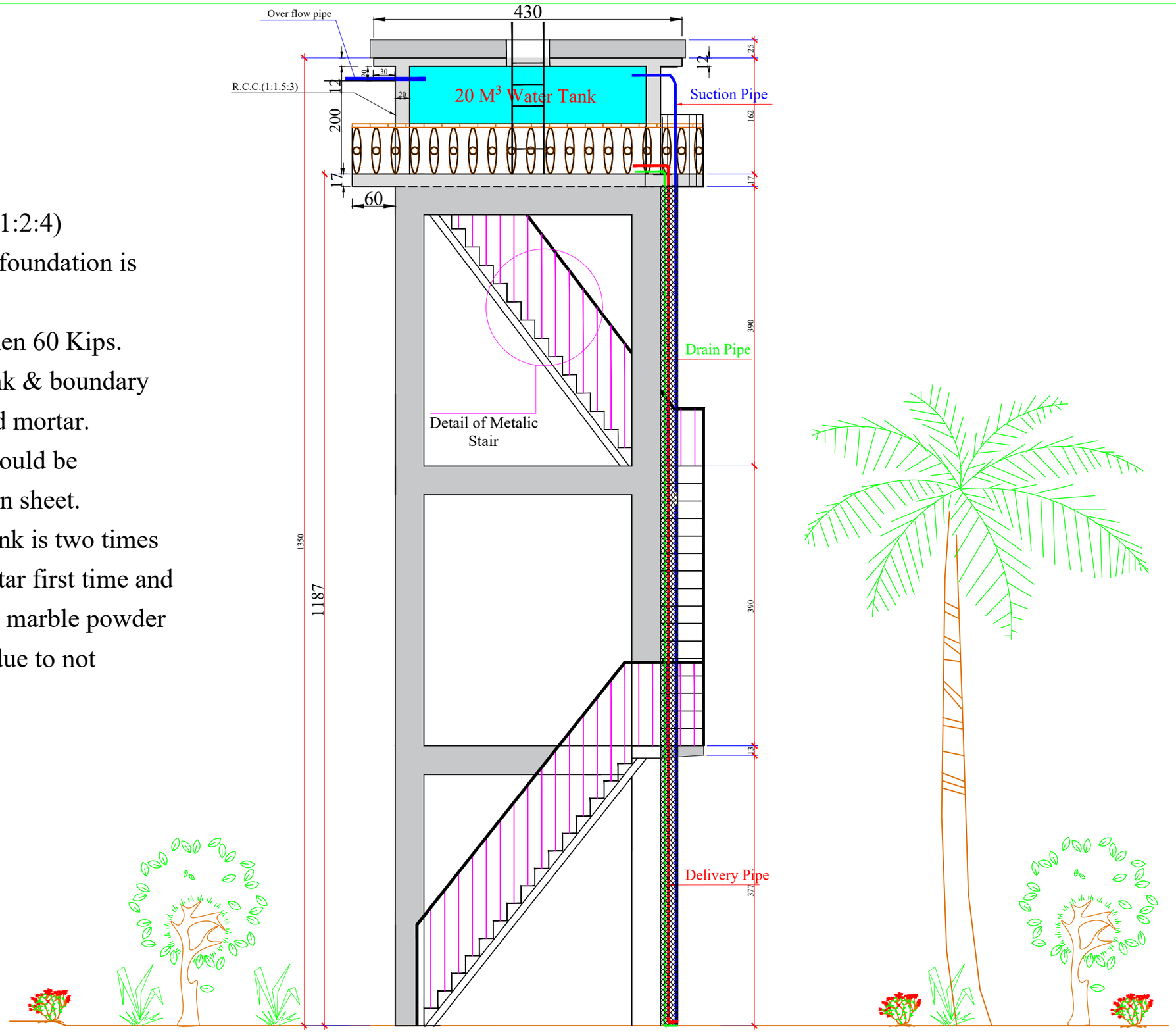

Funded by:	USAID/BHA	Drafted and Design BY:	IMC/WASH Team	Province	Laghman	Date	Sep/2022	Drawing Tile	Elevated 20 M3 Tank	International Medical Corps	
INTERNATIONAL MEDICAL CORPS (IMC) PROGRAM DEPARTMENT WASH UNIT		Review and Checked by:	Eng. Yousuf Mazhar	District	Alishing	Scale	A3-shown	Sheet Title	Front View		
		Review and Approved by:	Eng. Mohammad Yasir	Village	Shamakat sharafuddin	Unit	Centimeters	Sheet #	01		

Foundation Plan of Elevated Water Tank

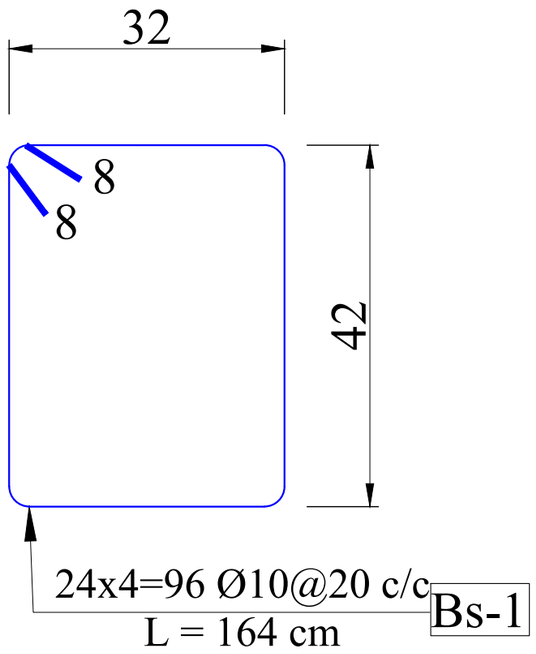

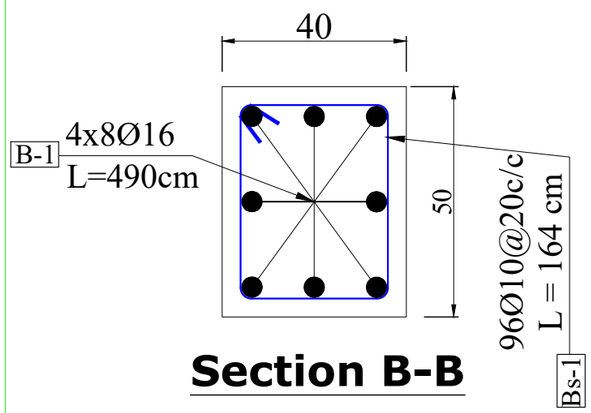

Section B-B

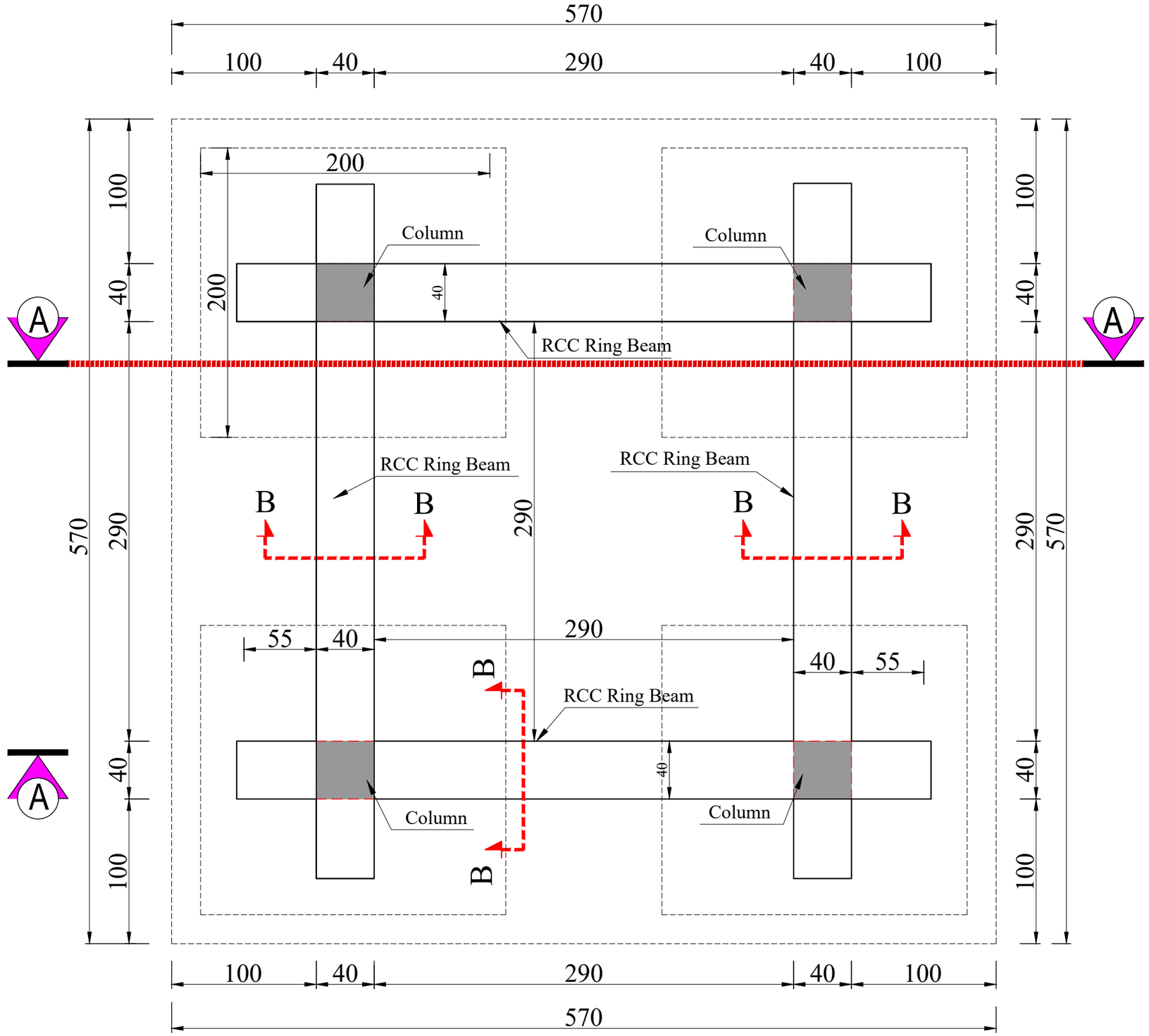

Funded by:	USAID/BHA	Drafted and Design BY:	IMC/WASH Team	Province	Laghman	Date	Sep/2022	Drawing Tile	Elevated 20 M3
INTERNATIONAL MEDICAL CORPS (IMC) PROGRAM DEPARTMENT WASH UNIT		Review and Checked by:	Eng. Yousuf Mazhar	District	Alishing	Scale	A3-Shown	Sheet Title	Foundation Plan
		Review and Approved by:	Eng. Mohammad Yasir	Village	Shamakat sharafuddin	Unit	Centimeters	Sheet #	------

International Medical Corps

Reinforcement Plan of Footing

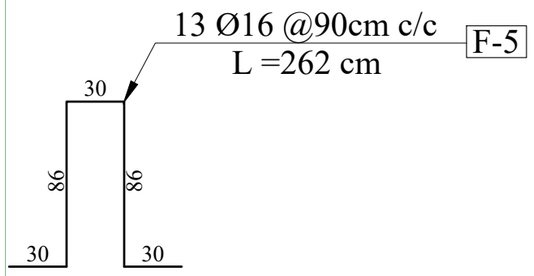

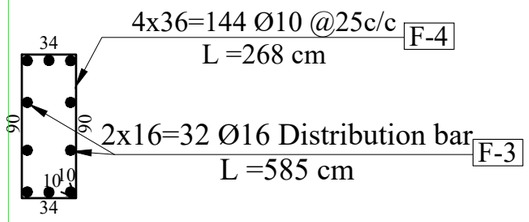

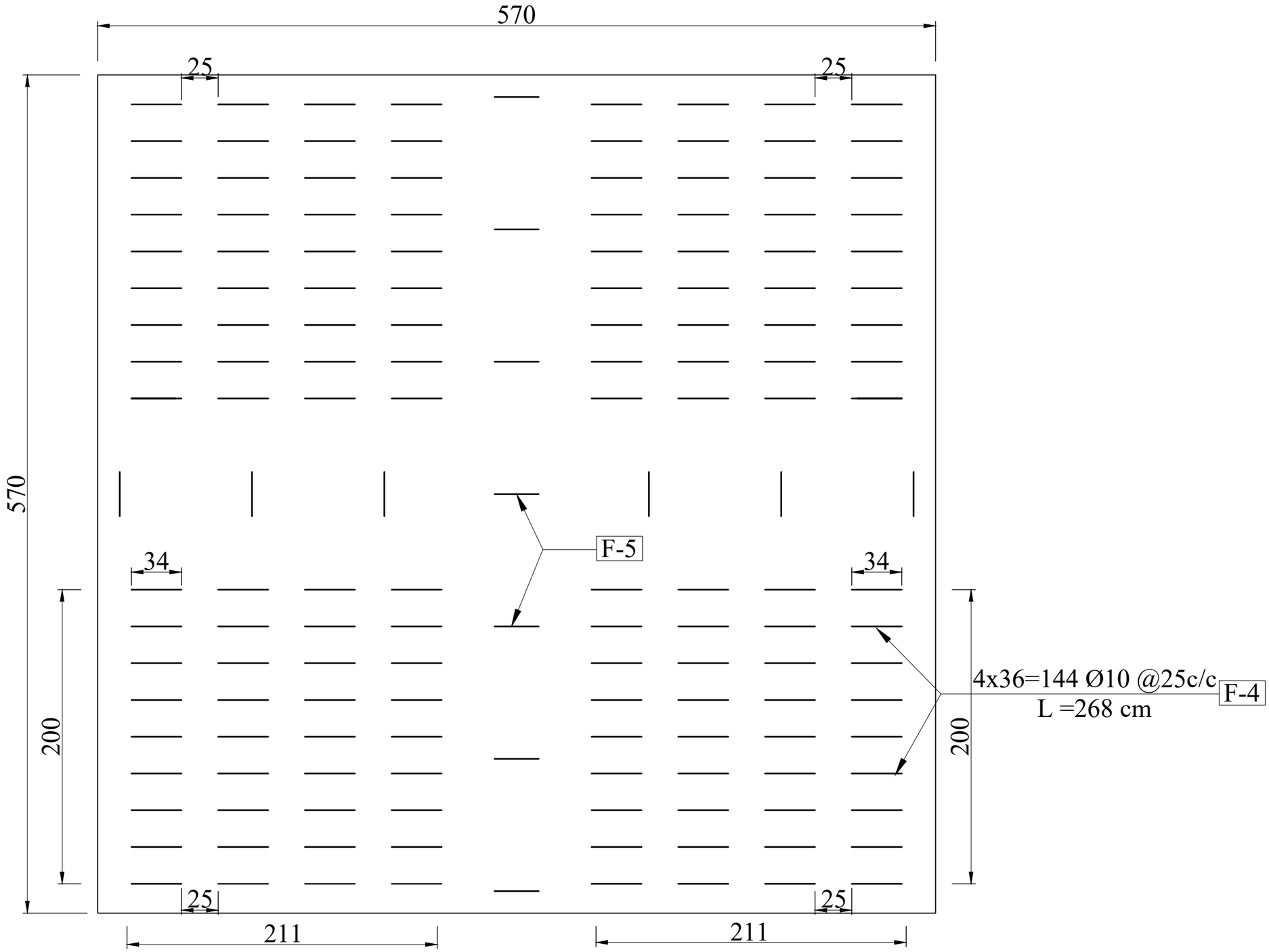

Funded by:	USAID/BHA	Drafted and Design BY:	IMC/WASH Team	Province	Laghman	Date	Sep/2022	Drawing Tile	Elevated 20 M3
INTERNATIONAL MEDICAL CORPS (IMC) PROGRAM DEPARTMENT WASH UNIT		Review and Checked by:	Eng. Yousuf Mazhar	District	Alishing	Scale	A3-Shown	Sheet Title	Foundation Reinfor.
		Review and Approved by:	Eng. Mohammad Yasir	Village	Shamakat sharafuddin	Unit	Centimeters	Sheet #	---------

International Medical Corps

Reinforcement Plan of Footing

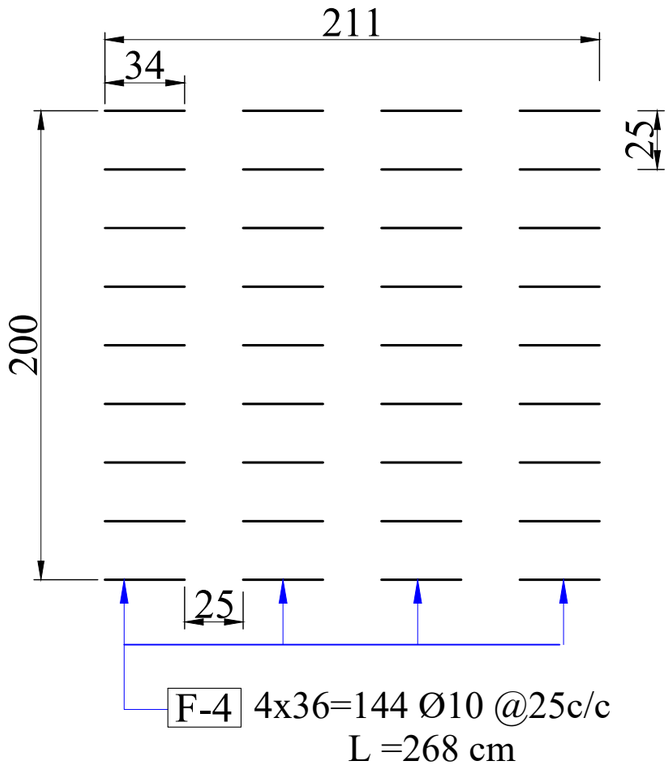

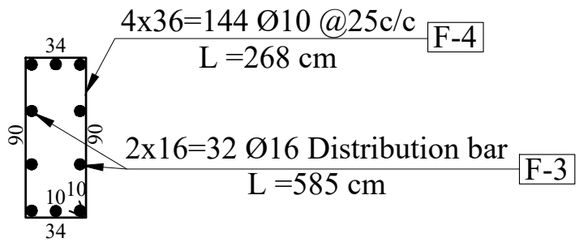

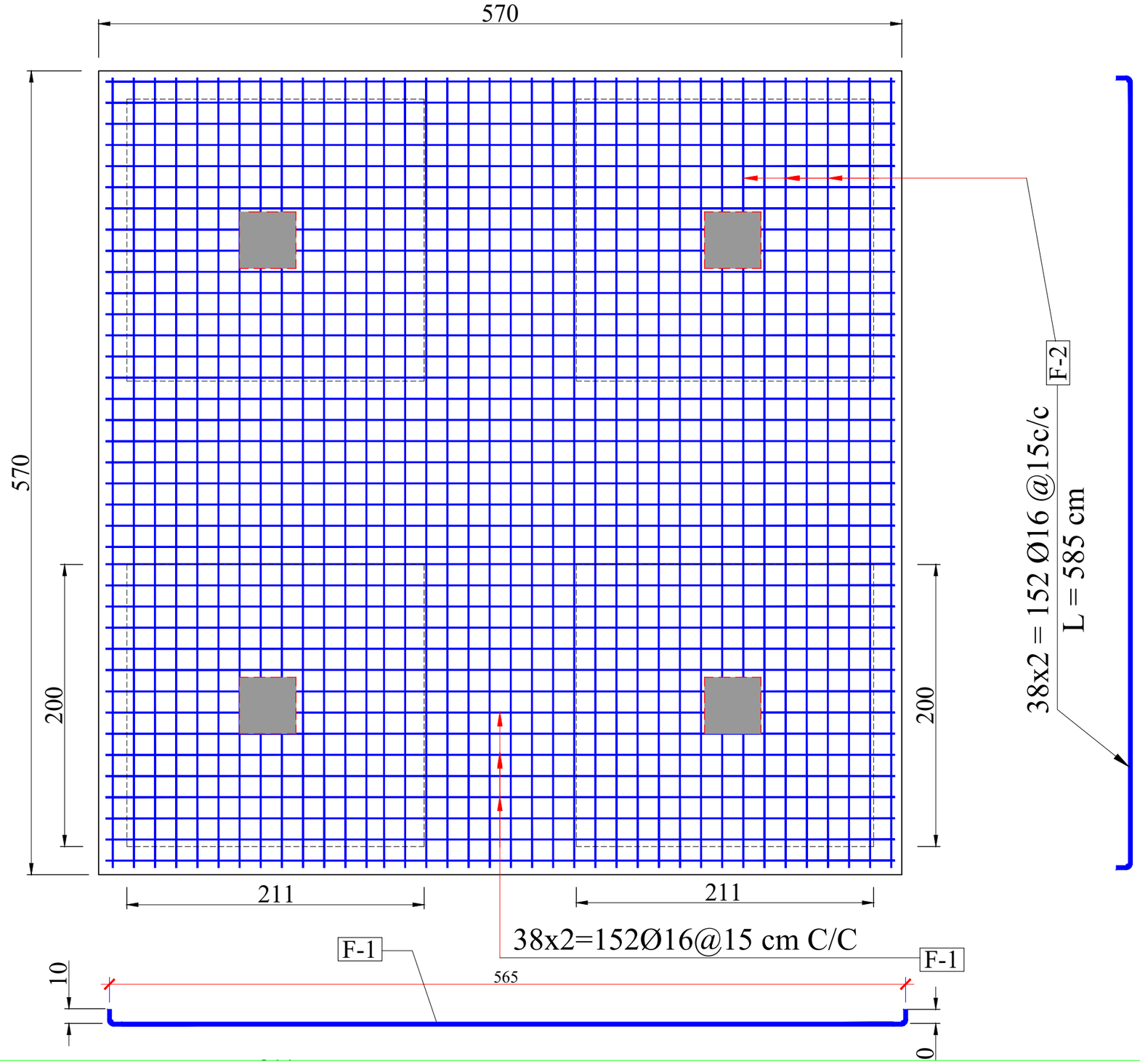

Funded by:	USAID/BHA	Drafted and Design BY:	IMC/WASH Team	Province	Laghman	Date	Sep/2022	Drawing Tile	Elevated 20 M3
INTERNATIONAL MEDICAL CORPS (IMC) PROGRAM DEPARTMENT WASH UNIT		Review and Checked by:	Eng. Yousuf Mazhar	District	Alishing	Scale	A3-Shown	Sheet Title	Foundation Reinf.
		Review and Approved by:	Eng. Mohammad Yasir	Village	Shamakat sharafuddin	Unit	Centimeters	Sheet #	---------

International Medical Corps

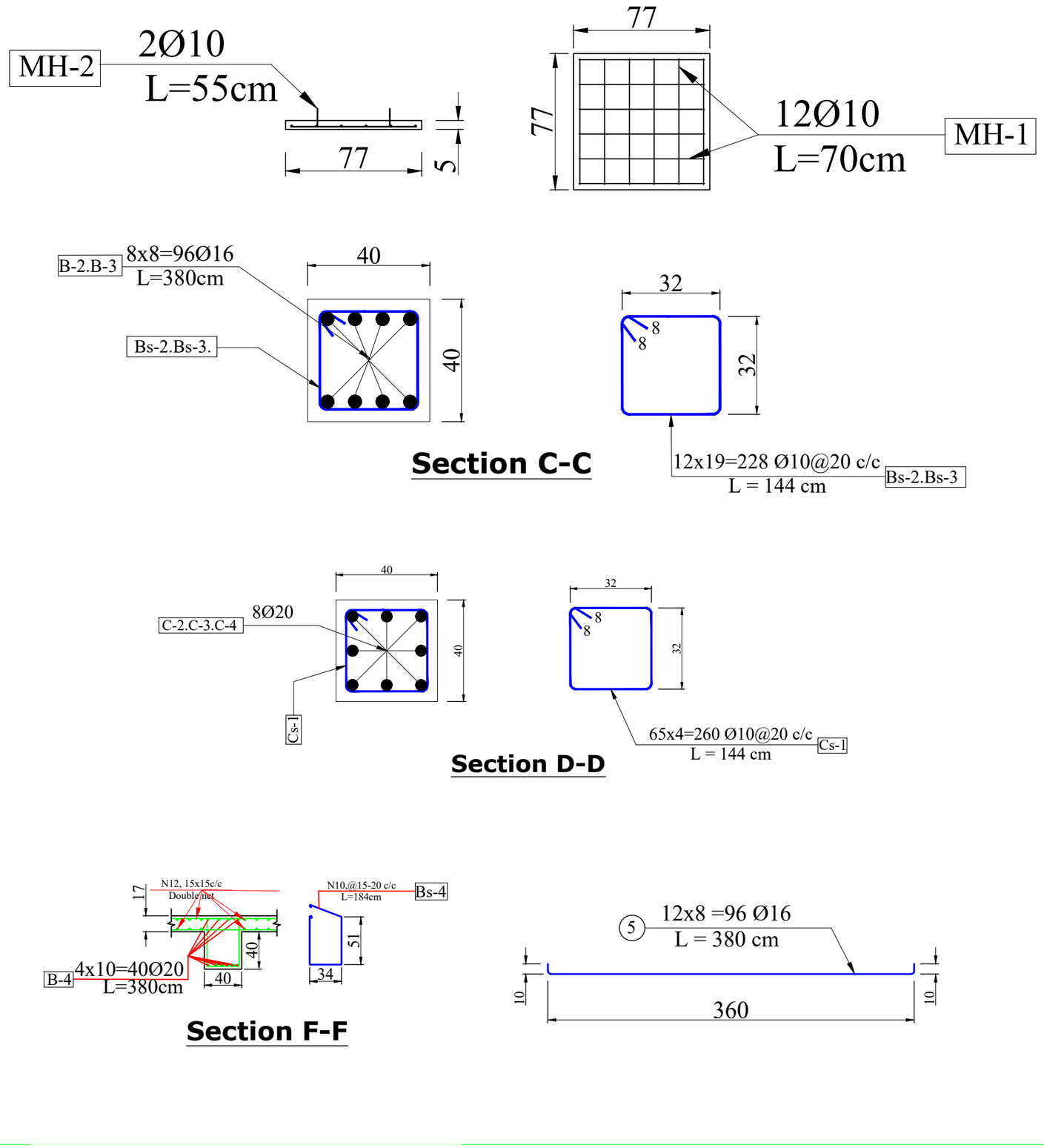

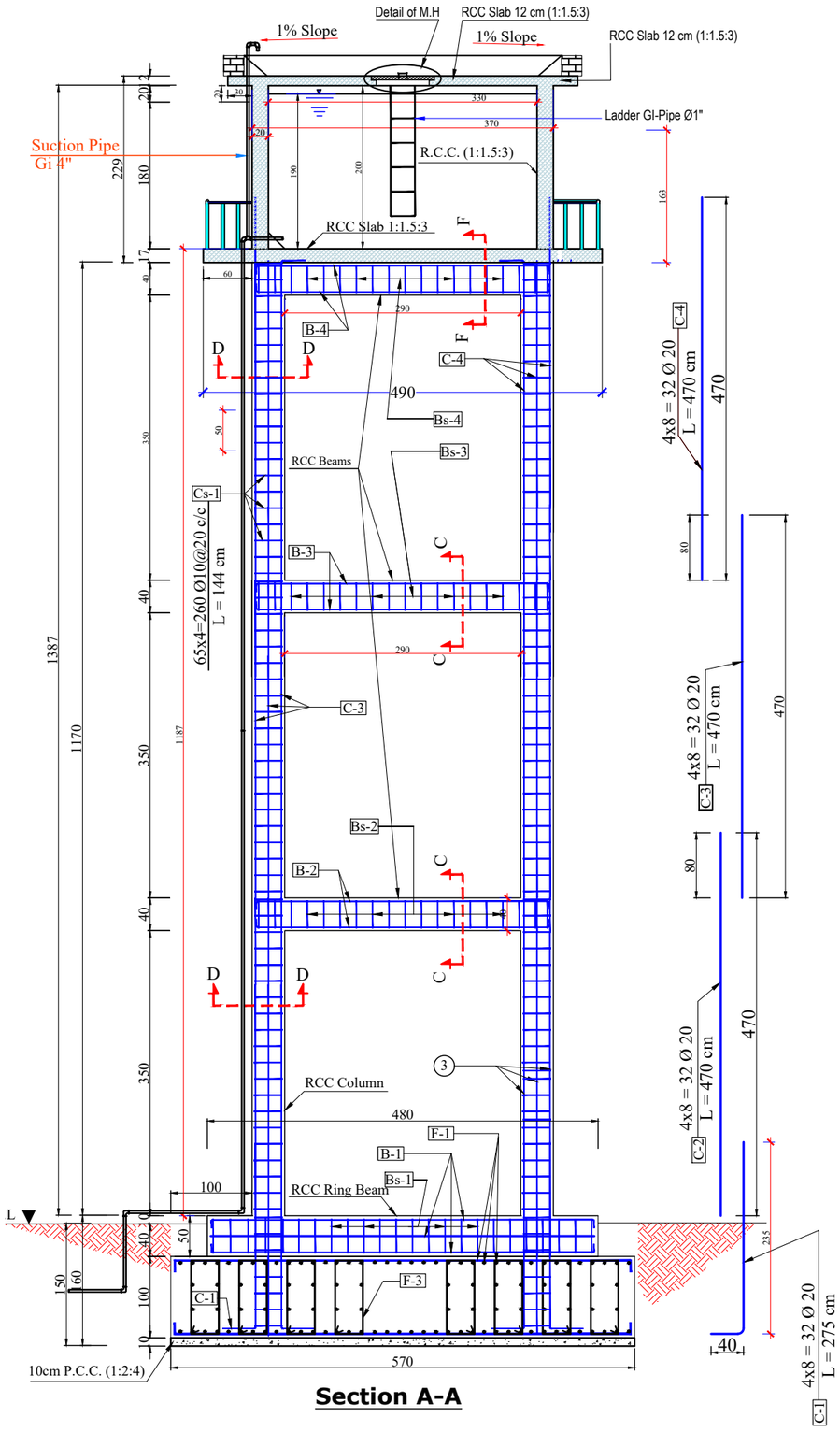

Funded by:	USAID/BHA	Drafted and Design BY:	IMC/WASH Team	Province	Laghman	Date	Sep/2022	Drawing Tile	Elevated 20 M3
INTERNATIONAL MEDICAL CORPS (IMC) PROGRAM DEPARTMENT WASH UNIT		Review and Checked by:	Eng. Yousuf Mazhar	District	Alishing	Scale	A3-Shown	Sheet Title	Section A-A
		Review and Approved by:	Eng. Mohammad Yasir	Village	Shamakat sharafuddin	Unit	Centimeters	Sheet #	---------

International Medical Corps

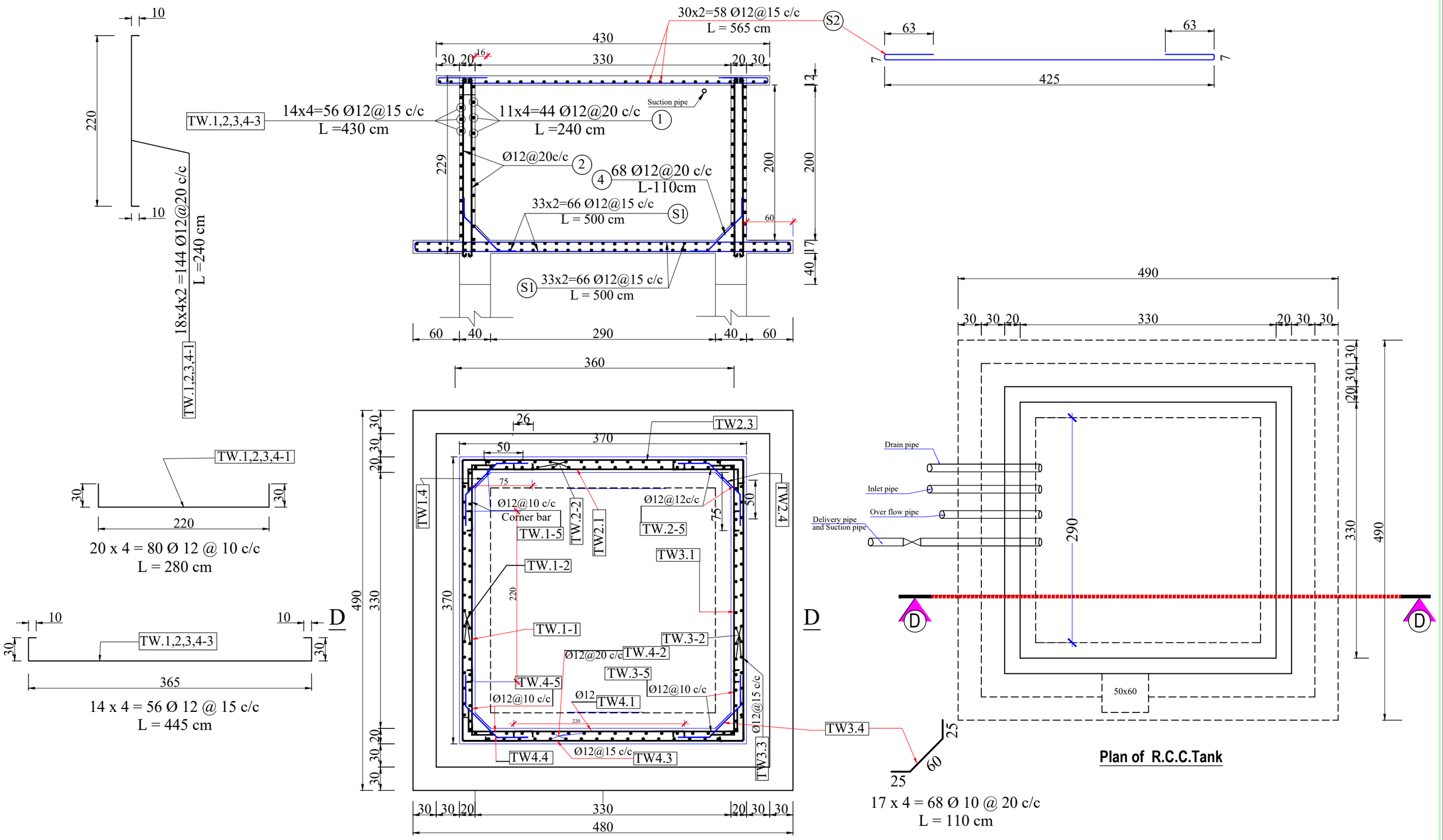

Reinforcement Plan of Water Tank

Funded by:	USAID/BHA	Drafted and Design BY:	IMC/WASH Team	Province	Laghman	Date	Sep/2022	Drawing Tile	Elevated 20 M3	International Medical Corps	
INTERNATIONAL MEDICAL CORPS (IMC) PROGRAM DEPARTMENT WASH UNIT		Review and Checked by:	Eng. Yousuf Mazhar	District	Alishing	Scale	A3-Shown	Sheet Title	Tank Reinfro.		
		Review and Approved by:	Eng. Mohammad Yasir	Village	Shamakat sharafuddin	Unit	Centimeters	Sheet #	---------		

Stair Case Landing Reinforcement Details

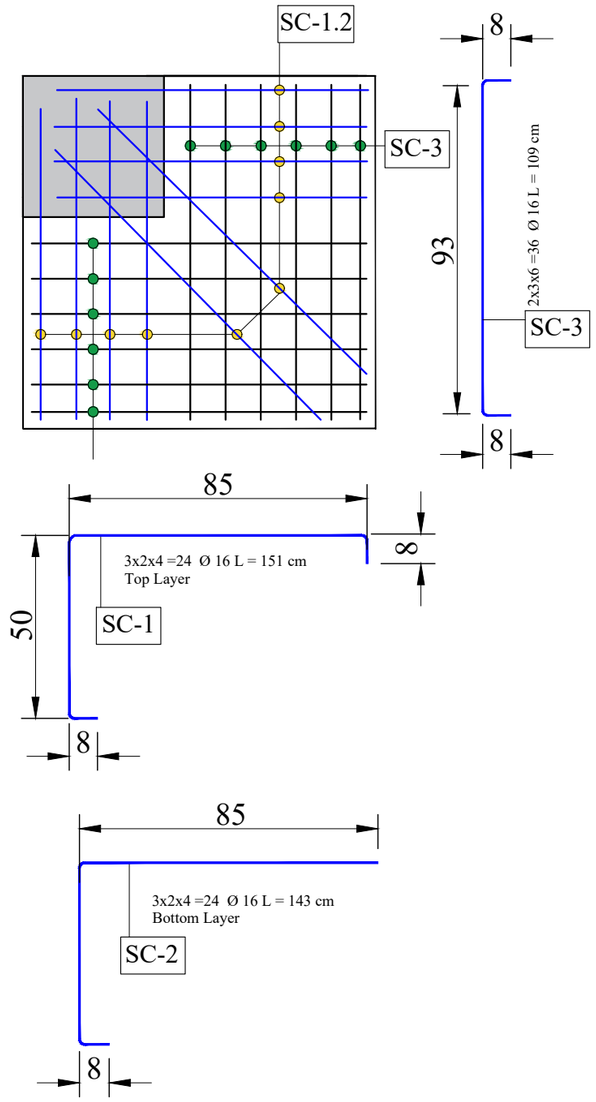

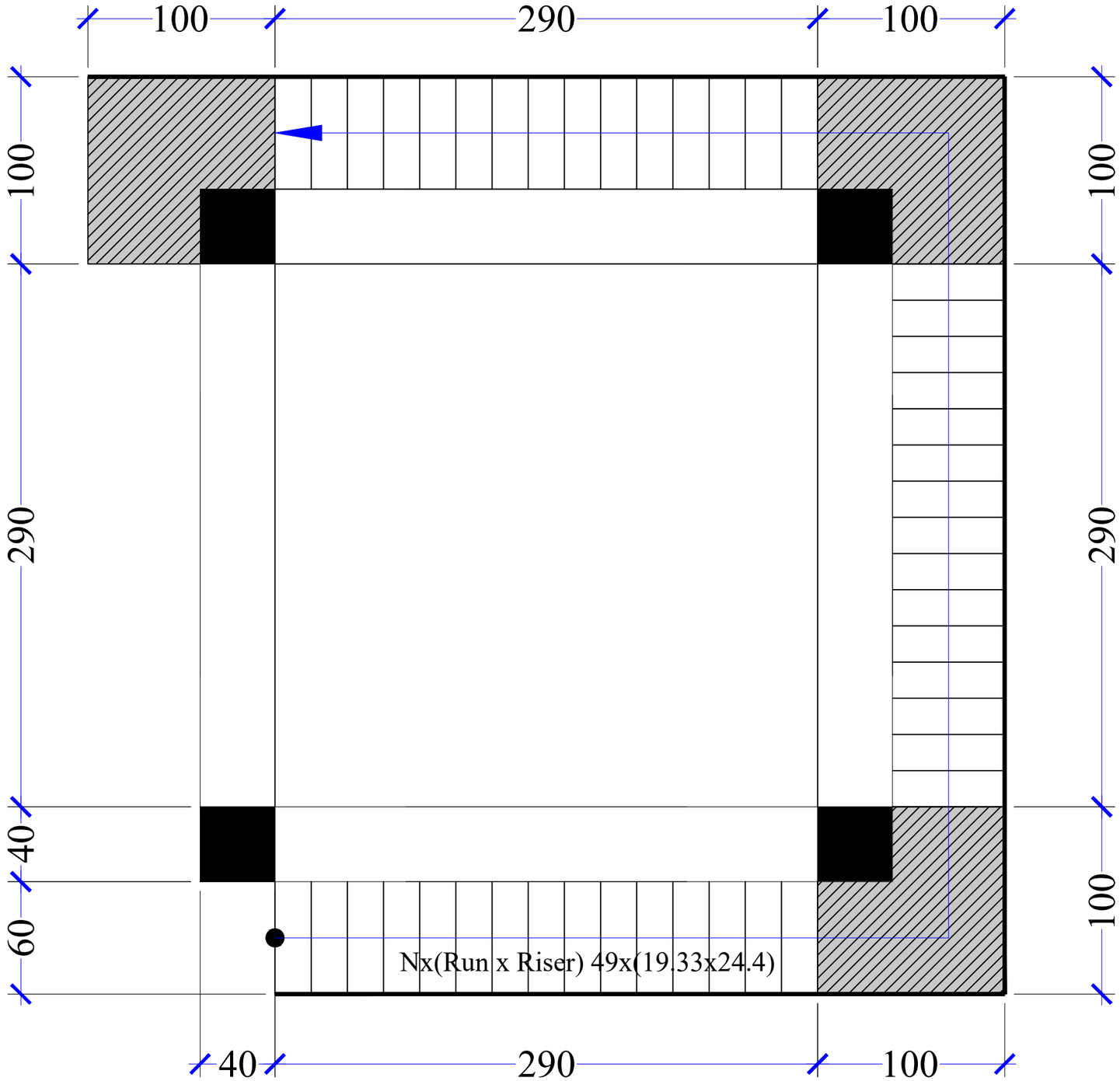

Stair Case Plan

Funded by:	USAID/BHA	Drafted and Design BY:	IMC/WASH Team	Province	Laghman	Date	Sep/2022	Drawing Tile	Elevated 20 M3	International Medical Corps	
INTERNATIONAL MEDICAL CORPS (IMC) PROGRAM DEPARTMENT WASH UNIT		Review and Checked by:	Eng. Yousuf Mazhar	District	Alishing	Scale	A3-Shown	Sheet Title	Stair Plan		
		Review and Approved by:	Eng. Mohammad Yasir	Village	Shamakat sharafuddin	Unit	Centimeters	Sheet #	---------		

DETAIL--B

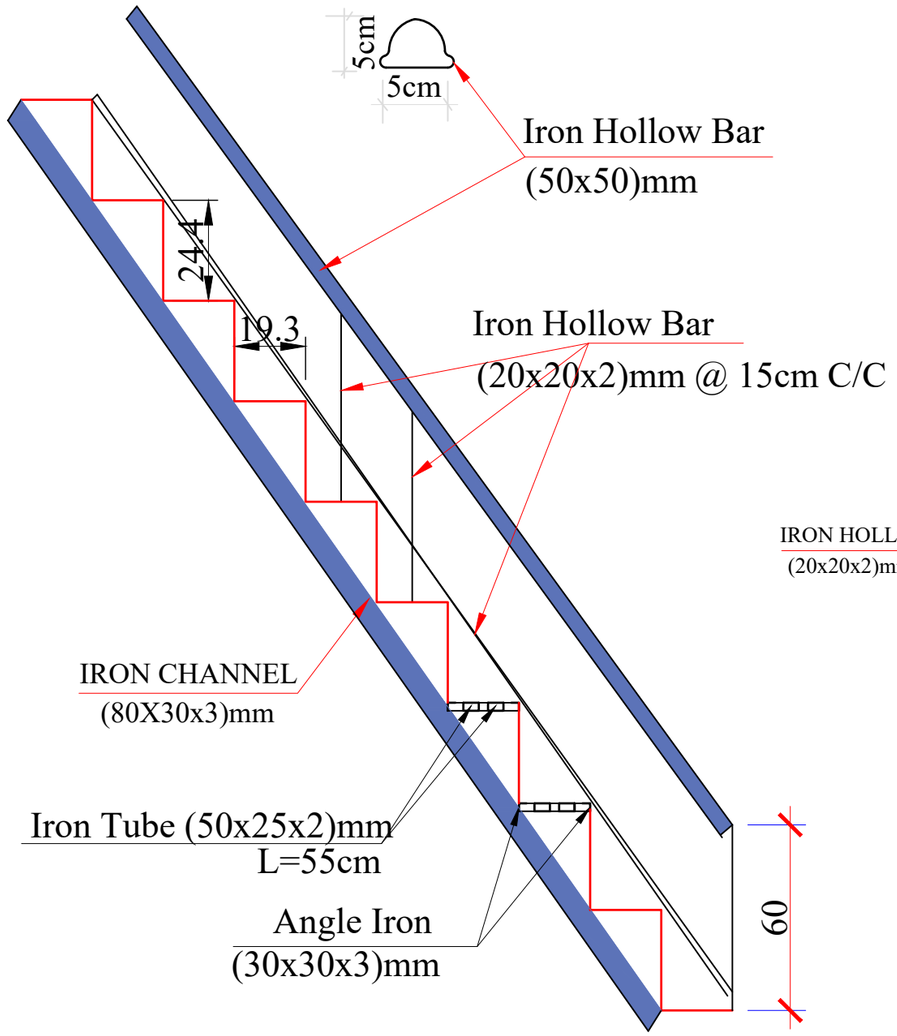

DOOR FOR STAIR CASE

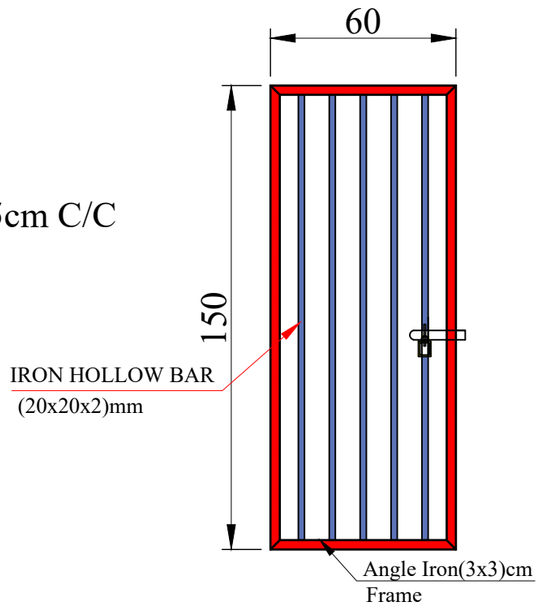

DETAIL--C

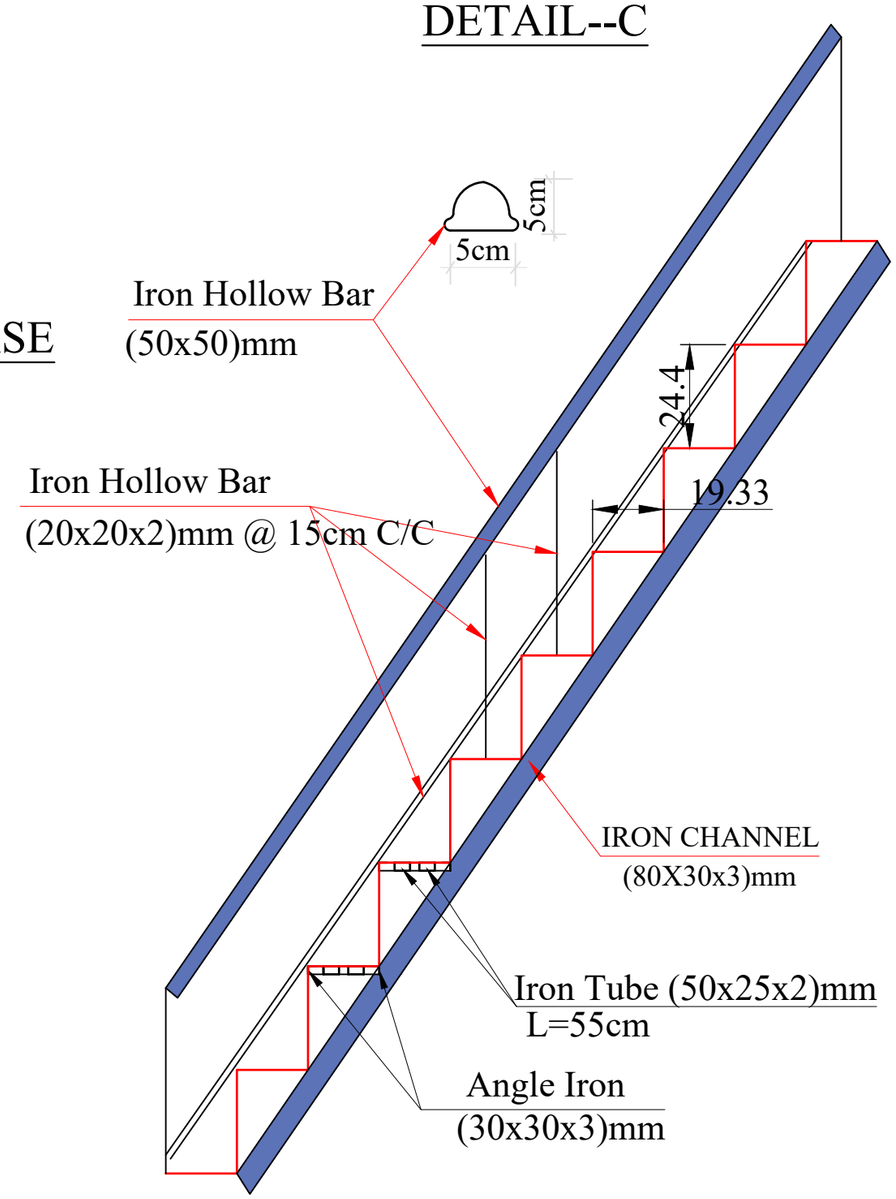

Funded by:	USAID/BHA	Drafted and Design BY:	IMC/WASH Team	Province	Laghman	Date	Sep/2022	Drawing Tile	Elevated 20 M3
INTERNATIONAL MEDICAL CORPS (IMC) PROGRAM DEPARTMENT WASH UNIT		Review and Checked by:	Eng. Yousuf Mazhar	District	Alishing	Scale	A3-Shown	Sheet Title	Stair Section
		Review and Approved by:	Eng. Mohammad Yasir	Village	Shamakat sharafuddin	Unit	Centimeters	Sheet #	---------

International Medical Corps

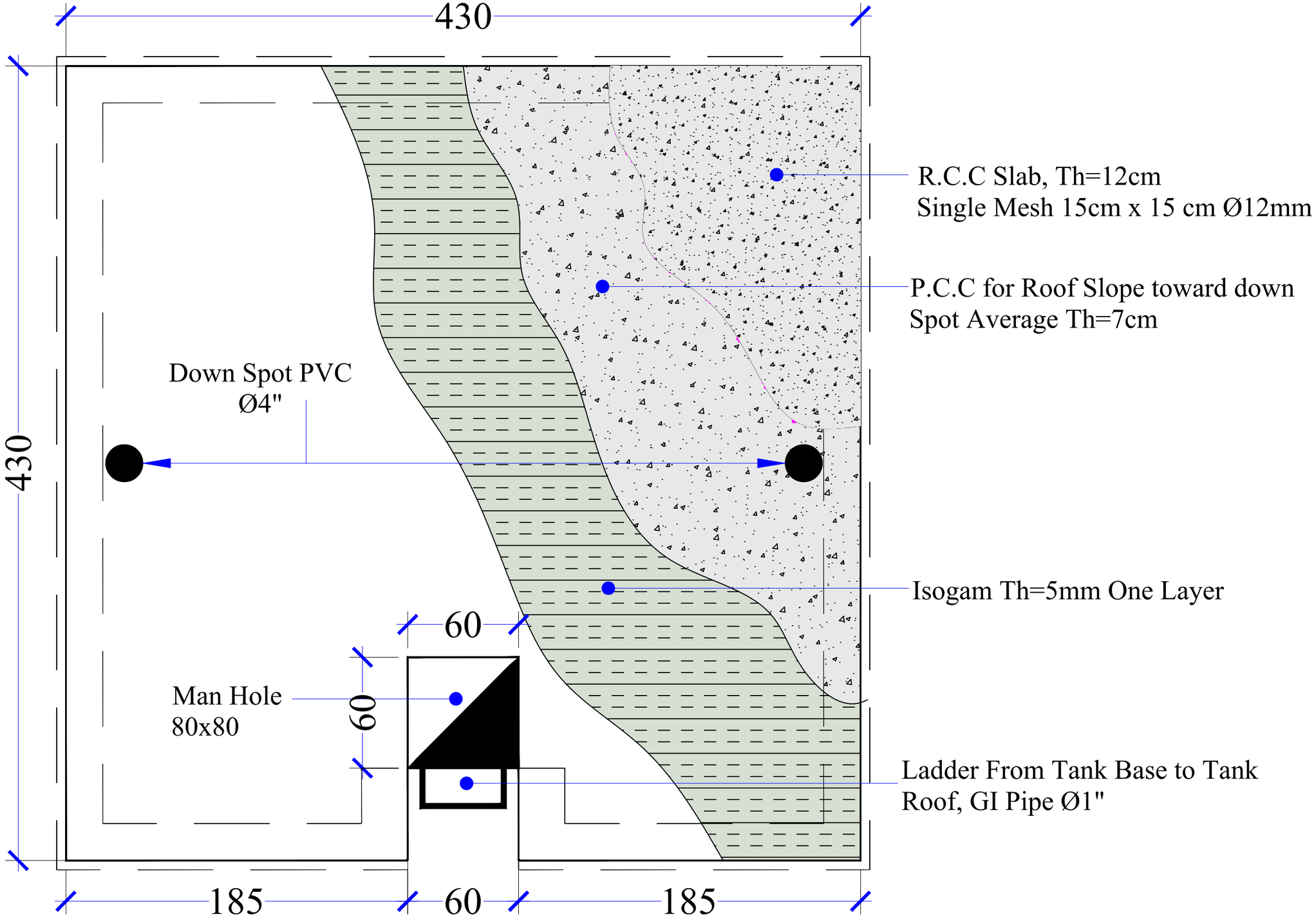

Roof Plan

Funded by:	USAID/BHA	Drafted and Design BY:	IMC/WASH Team	Province	Laghman	Date	Sep/2022	Drawing Tile	Elevated 20 M3
INTERNATIONAL MEDICAL CORPS (IMC) PROGRAM DEPARTMENT WASH UNIT		Review and Checked by:	Eng. Yousuf Mazhar	District	Alishing	Scale	A3-Shown	Sheet Title	Roof Plan
		Review and Approved by:	Eng. Mohammad Yasir	Village	Shamakat sharafuddin	Unit	Centimeters	Sheet #	---------

International Medical Corps

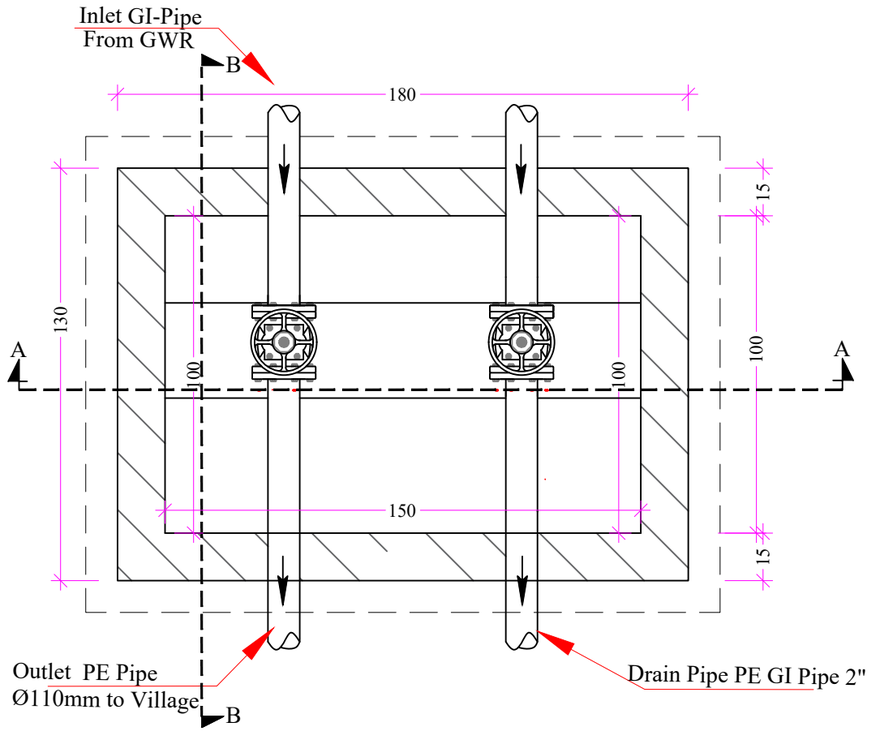

PLAN

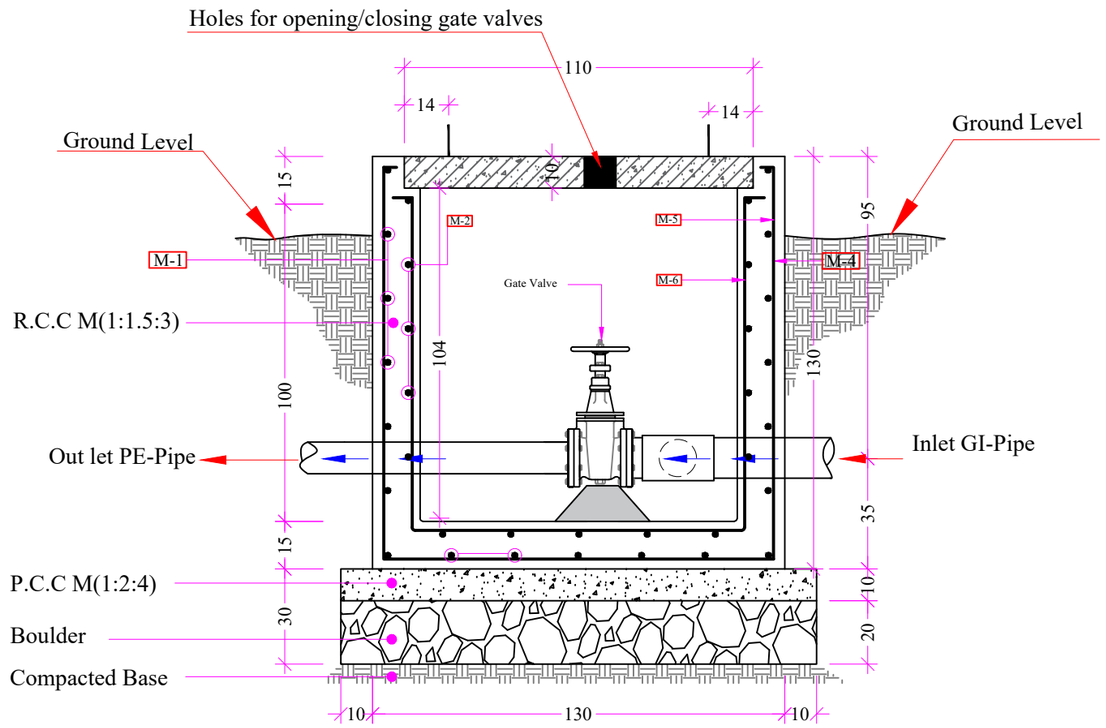

SECTION B-B

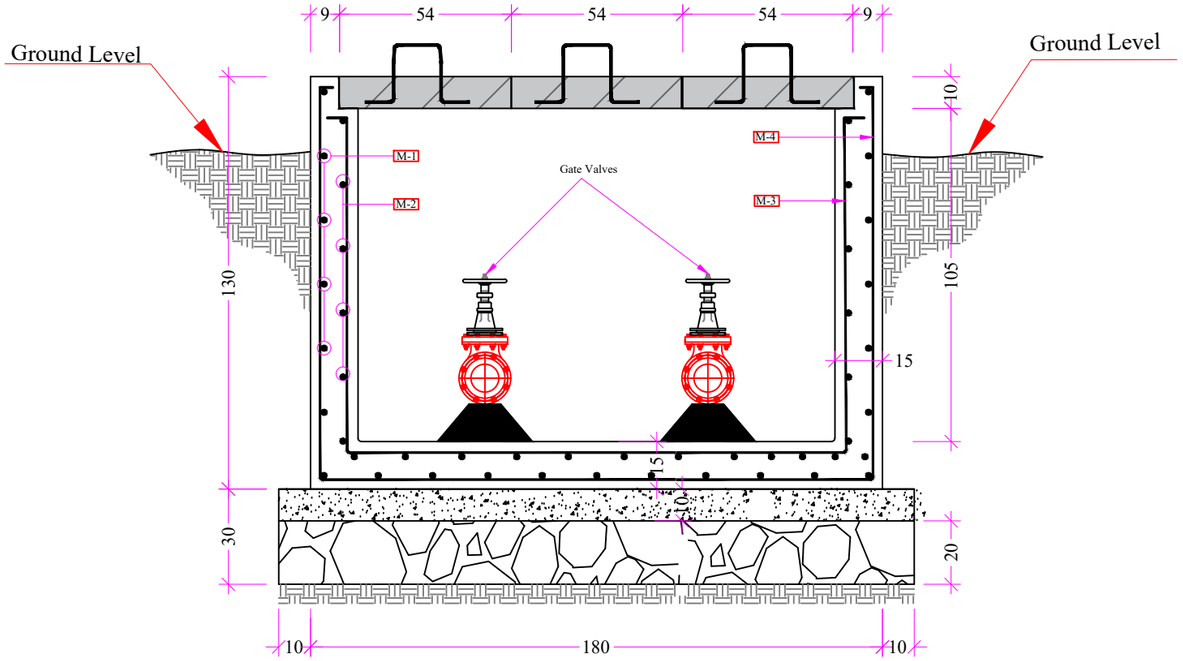

SECTION A-A

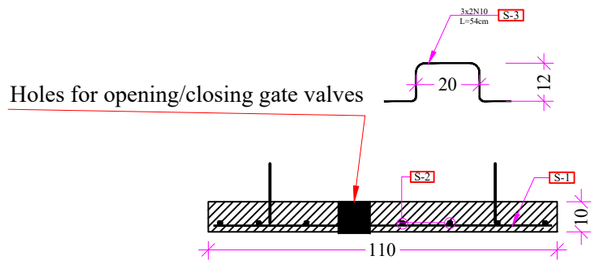

SECTION MS1-MS1

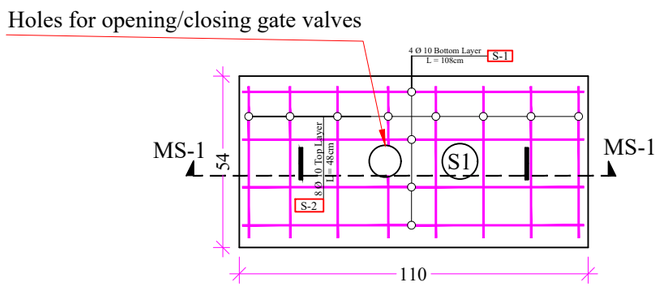

RCC SLAB PLAN

Funded by:	USAID/BHA	Drafted and Design BY:	IMC/WASH Team	Province	Laghman	Date	Sep/2022	Drawing Tile	Gate Valve
INTERNATIONAL MEDICAL CORPS (IMC) PROGRAM DEPARTMENT WASH UNIT		Review and Checked by:	Eng. Yousuf Mazhar	District	Alishing	Scale	A3-Shown	Sheet Title	Renfor. Plan
		Review and Approved by:	Eng. Mohammad Yasir	Village	Shamakt Sharafuddin	Unit	Centimeters	Sheet #	---------

International Medical Corps

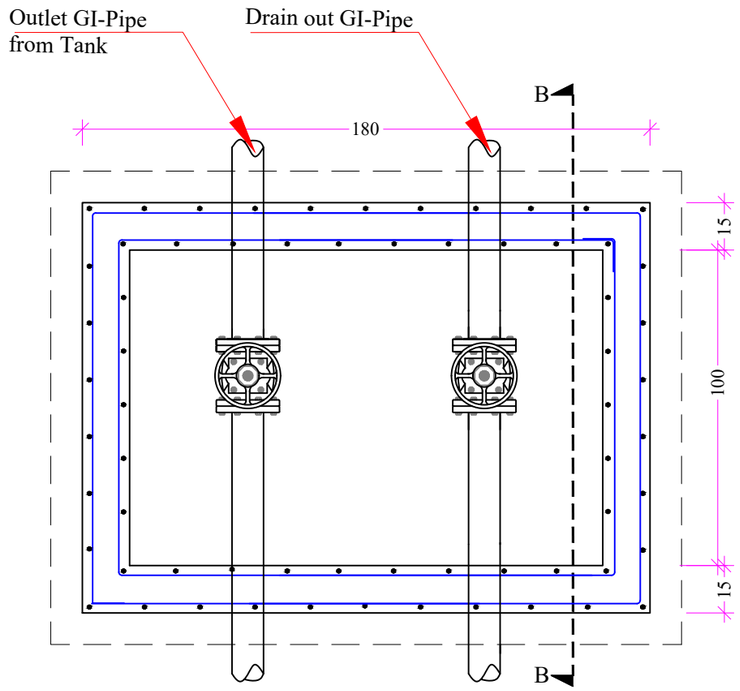

SECTIONAL PLAN OF RCC WALLS

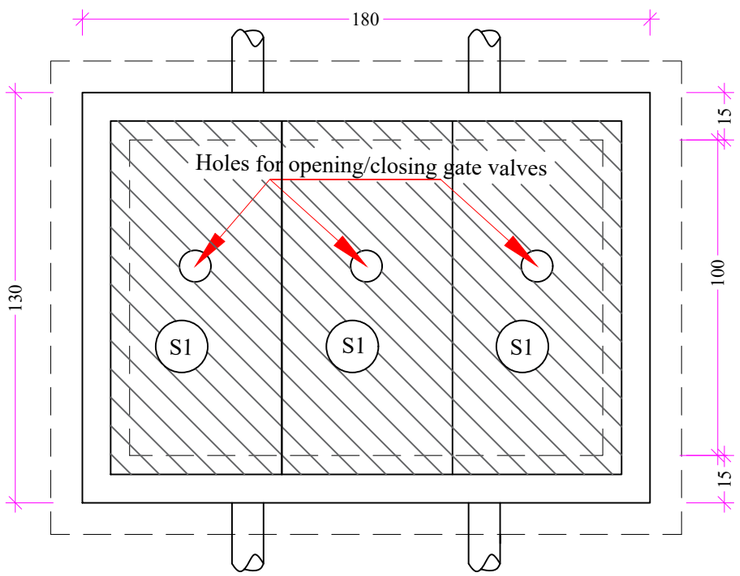

TOP VIEW

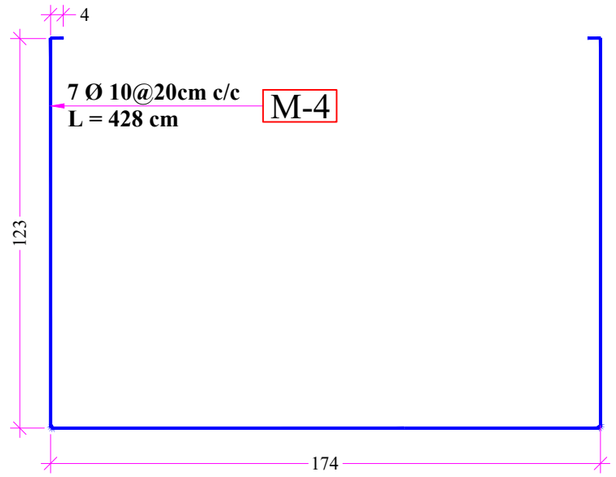

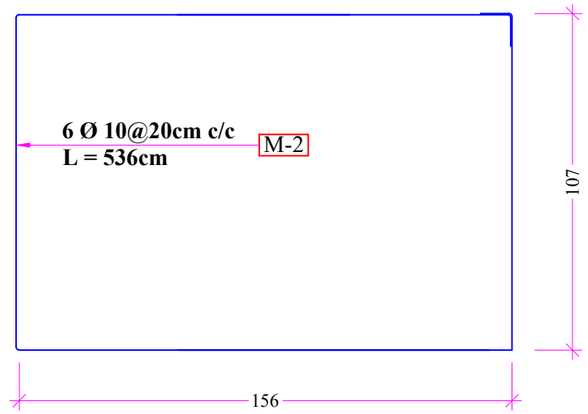

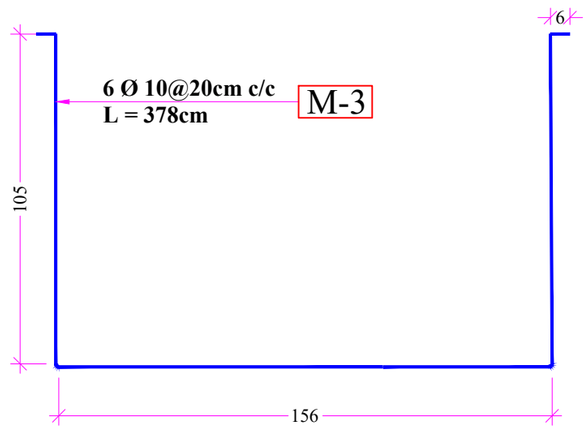

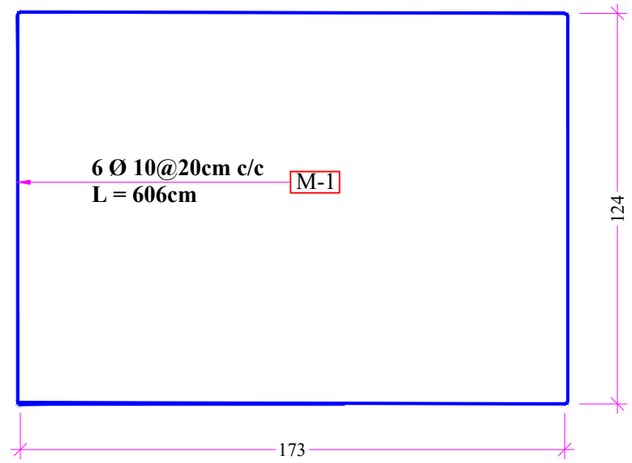

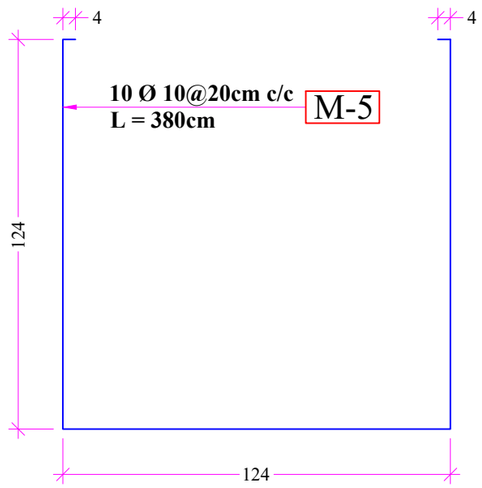

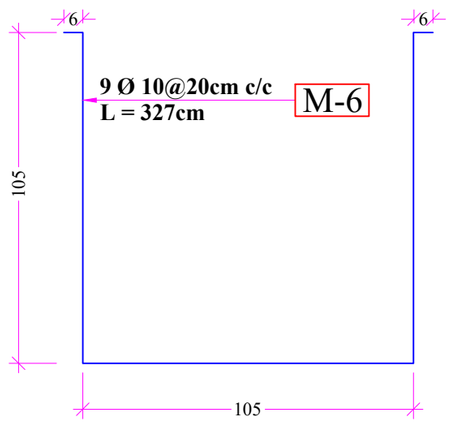

Funded by:	USAID/BHA	Drafted and Design BY:	IMC/WASH Team	Province	Laghman	Date	Sep/2022	Drawing Tile	Gate Valve
INTERNATIONAL MEDICAL CORPS (IMC) PROGRAM DEPARTMENT WASH UNIT		Review and Checked by:	Eng. Yousuf Mazhar	District	Alishing	Scale	A3-Shown	Sheet Title	Renfor. Plan
		Review and Approved by:	Eng. Mohammad Yasir	Village	Shamakt Sharafuddin	Unit	Centimeters	Sheet #	---------

International Medical Corps

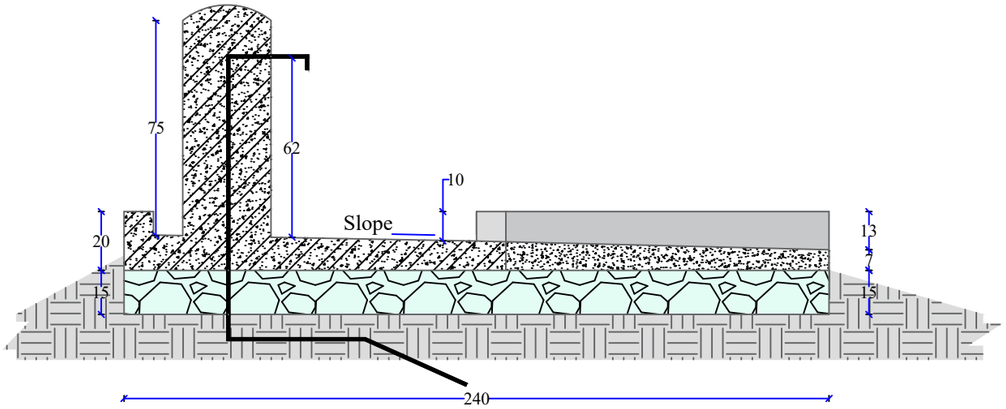

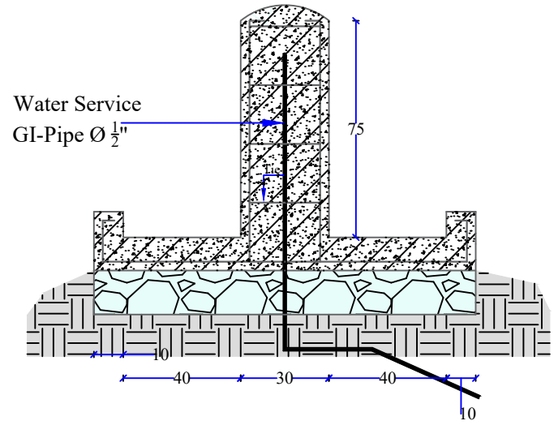

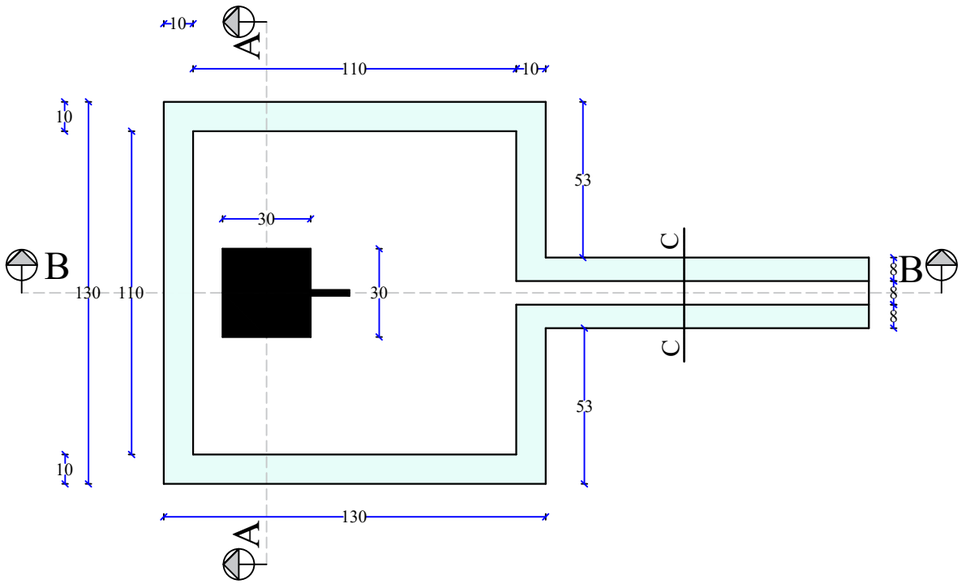

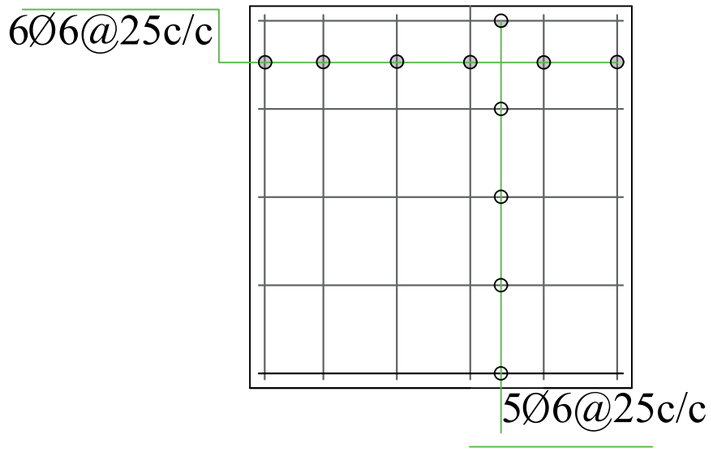

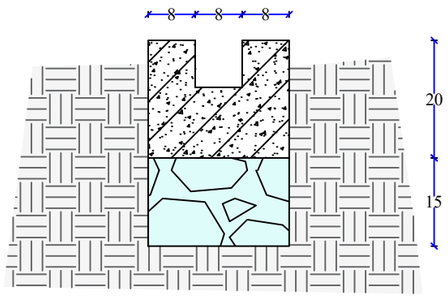

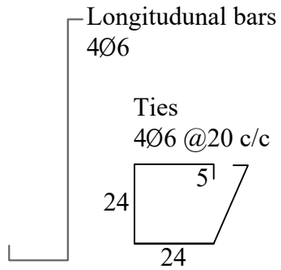

Tap Column reinfor...

Funded by:	USAID/BHA	Drafted and Design BY:	IMC/WASH Team	Province	Laghman	Date	Sep/2022	Drawing Tile	STP. Drawing
INTERNATIONAL MEDICAL CORPS (IMC) PROGRAM DEPARTMENT WASH UNIT		Review and Checked by:	Eng. Yousuf Mazhar	District	Alishing	Scale	A3-As shown	Sheet Title	Stand post
		Review and Approved by:	Eng. Mohammad Yasir	Village	Shamakat sharafuddin	Unit	Centimeters	Sheet #	----------

International Medical Corps

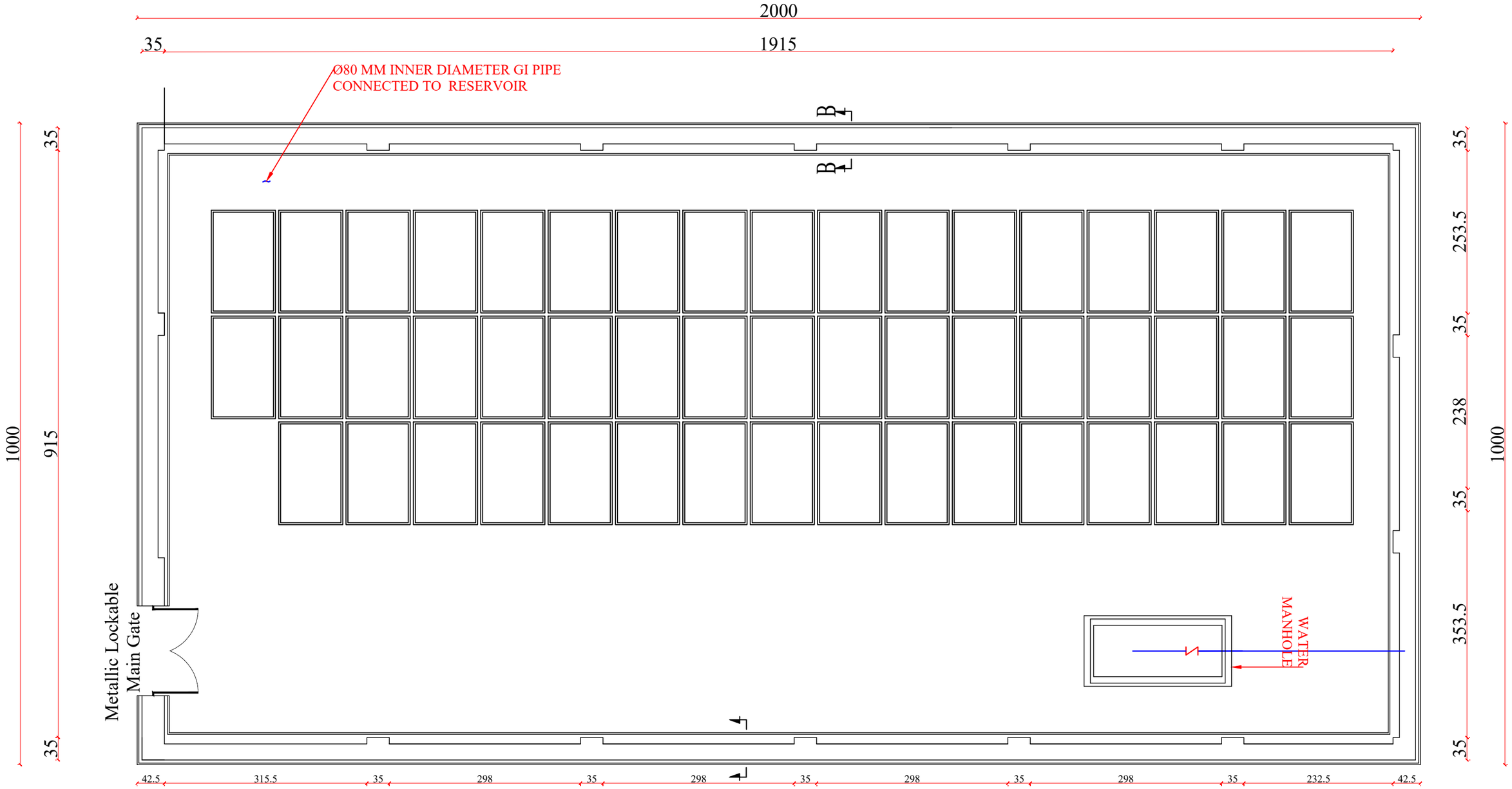

Note:
1- All dimensions are in cm unless otherwise stated.
2- During RCC work vibrator must be used to avoid.
3- All PCC works should be with M(1:2:4) mortar unless otherwise stated.
4- All RCC works should be with M(1:1.5:3) mortar unless otherwise stated.
5- Brick masonary (1:4).
6- Curing must be continued upto 28 days.
7- Clear and Clean water must be used every where.

Boundary wall

Funded by:	USAID/BHA	Drafted and Design BY:	IMC/WASH Team	Province	Laghman	Date	Sep/2022	Drawing Tile	Boundry Wall
INTERNATIONAL MEDICAL CORPS (IMC) PROGRAM DEPARTMENT WASH UNIT		Review and Checked by:	Eng. Yousuf Mazhar	District	Alishing	Scale	A3-Shown	Sheet Title	Boundry Wall Plan
		Review and Approved by:	Eng. Mohammad Yasir	Village	Shamakat sharafuddin	Unit	Centimeters	Sheet #	----------

International Medical Corps

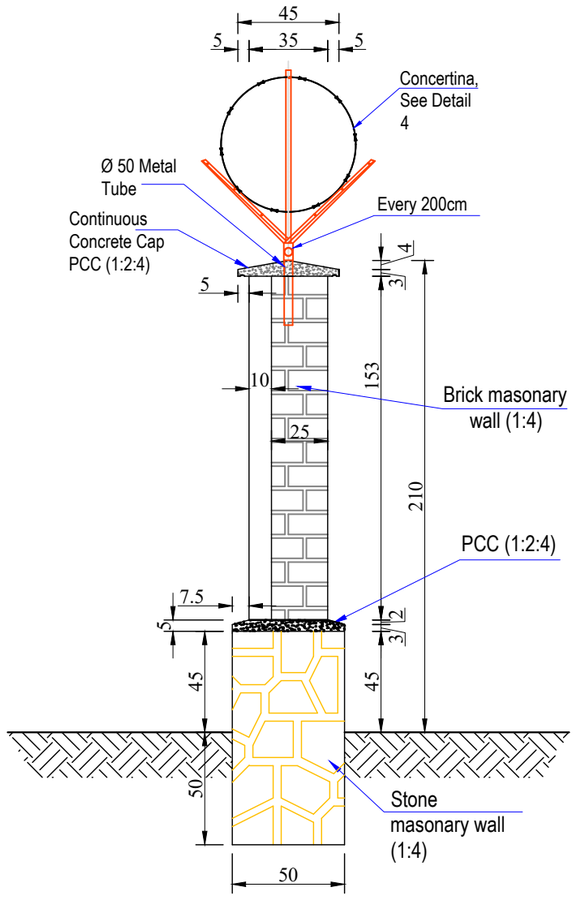

Section B-B

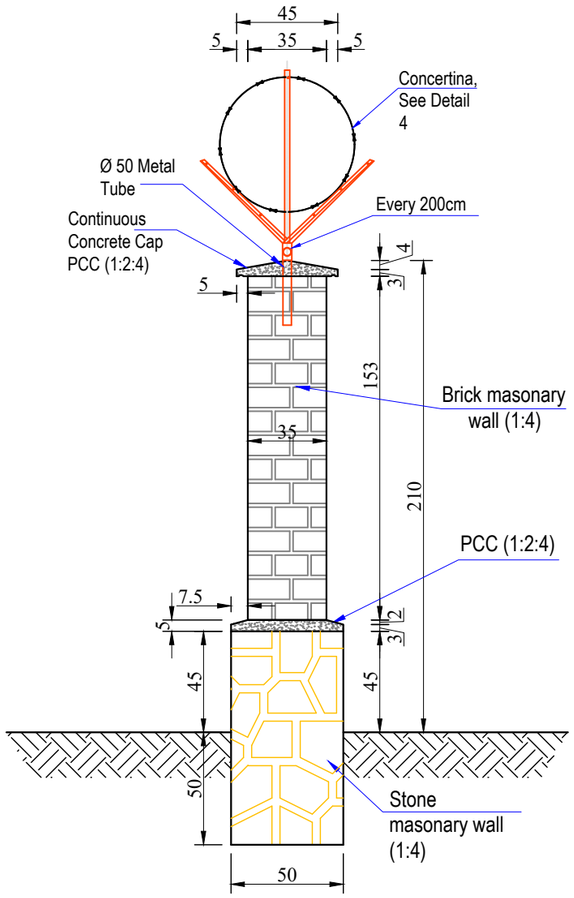

Section A-A

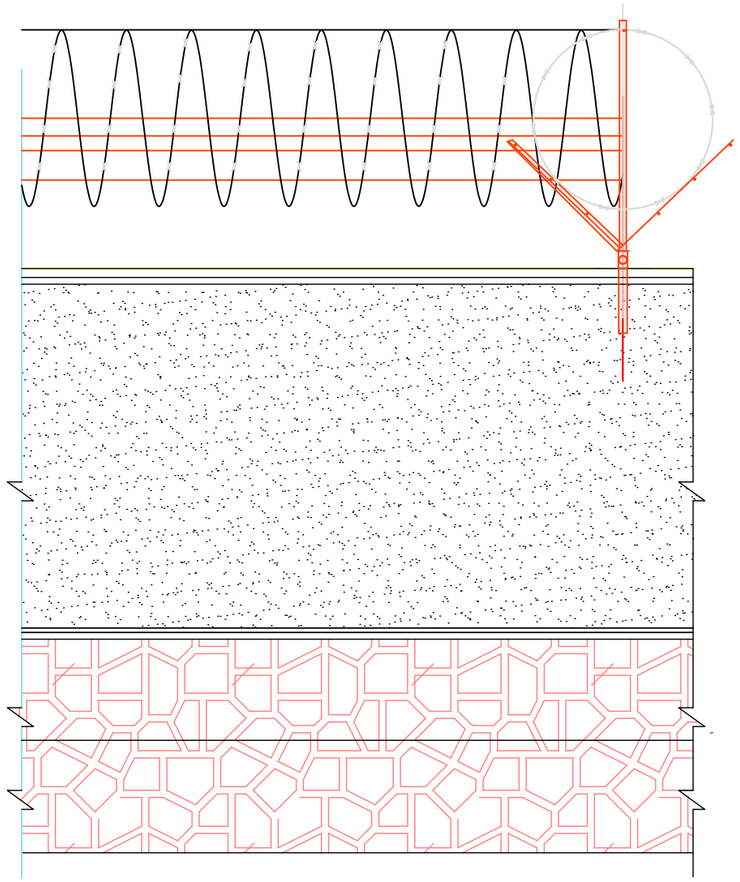

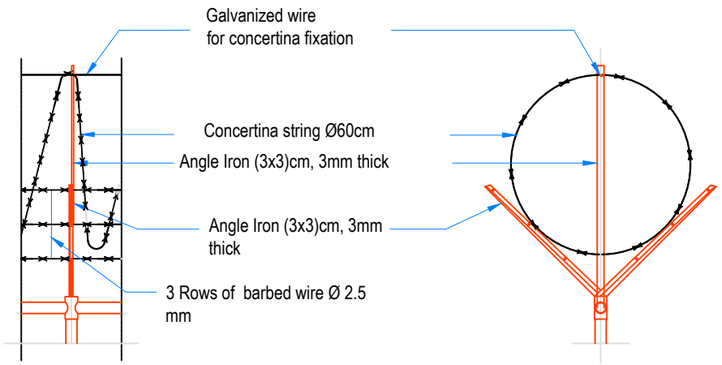

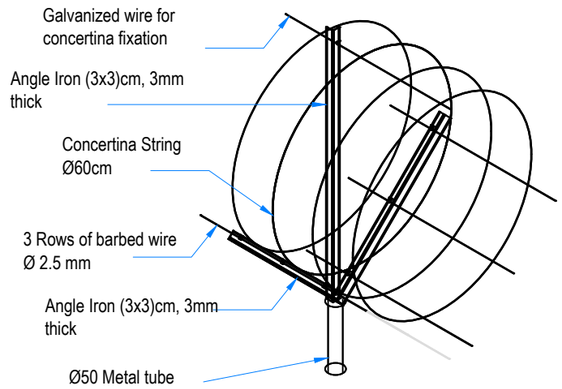

Isometric Concertina Detail

Funded by:	USAID/BHA	Drafted and Design BY:	IMC/WASH Team	Province	Laghman	Date	Sep/2022	Drawing Tile	Boundry Wall
INTERNATIONAL MEDICAL CORPS (IMC) PROGRAM DEPARTMENT WASH UNIT		Review and Checked by:	Eng. Yousuf Mazhar	District	Alishing	Scale	A3-Shown	Sheet Title	Front View+Section
		Review and Approved by:	Eng. Mohammad Yasir	Village	Shamakat sharafuddin	Unit	Centimeters	Sheet #	----------

International Medical Corps

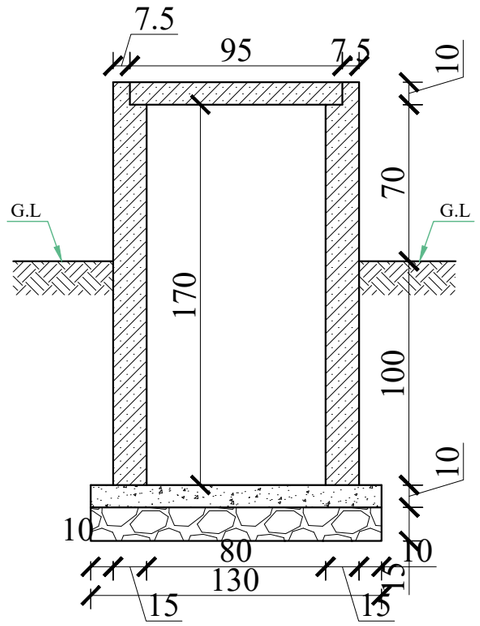

Section A-A

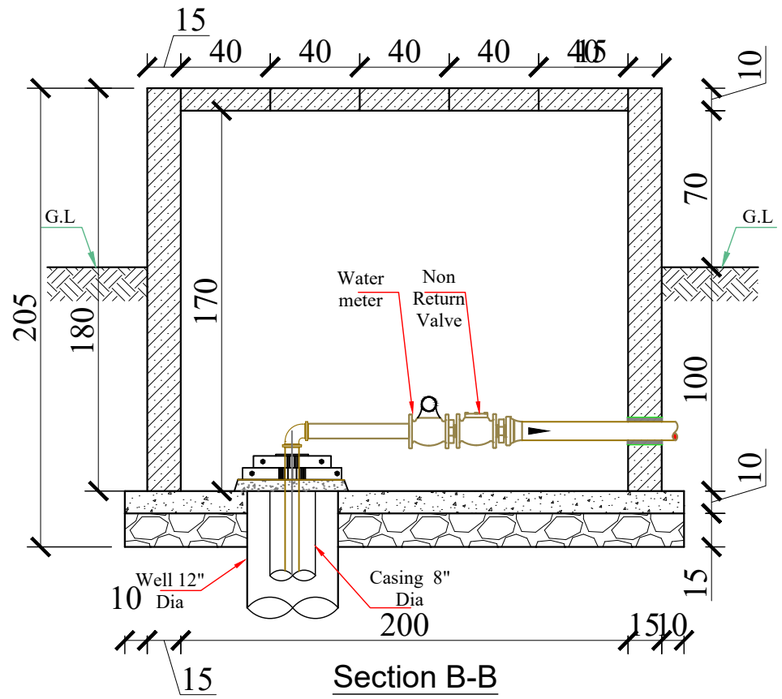

Section B-B

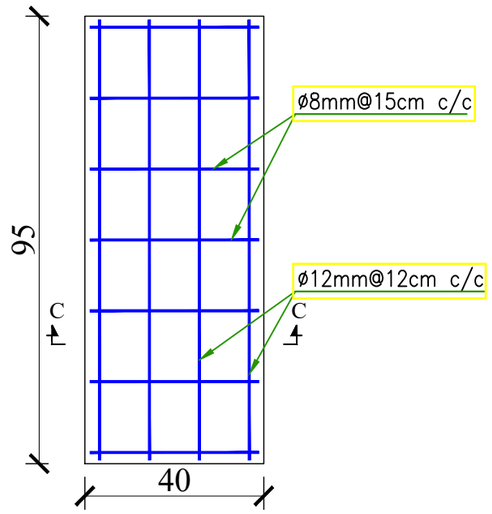

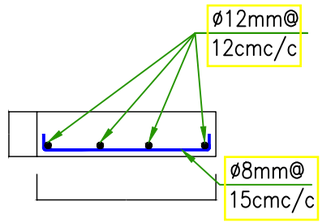

Section C - C

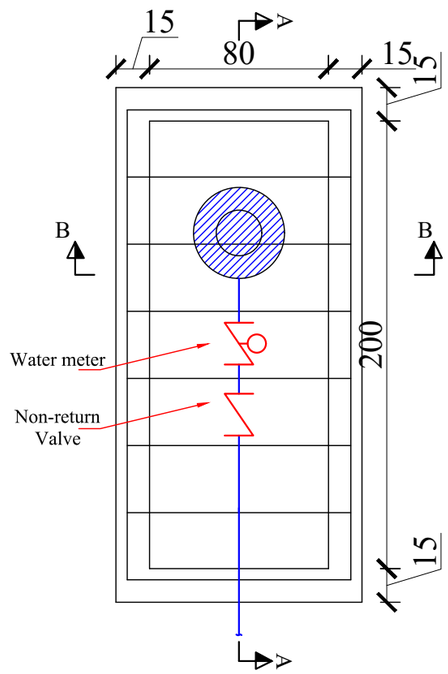

Well Protection Plan

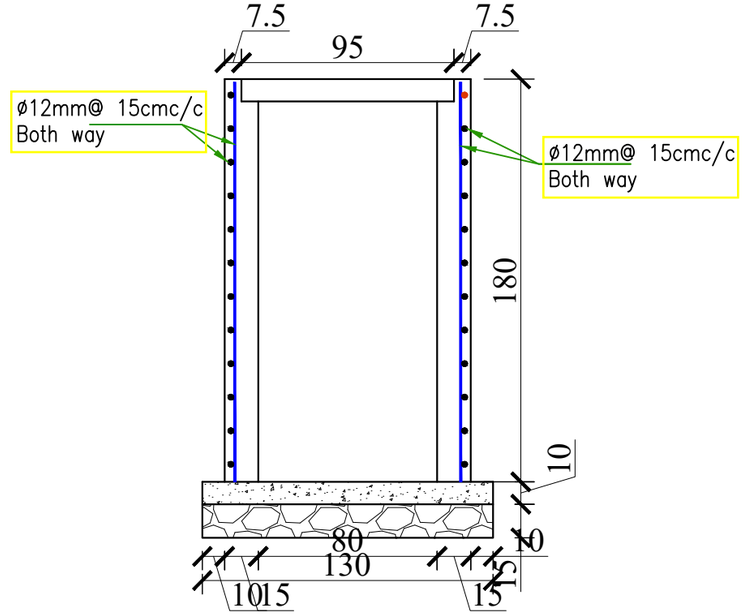

Wall Reinforcement

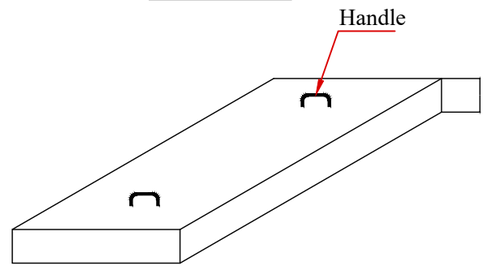

RCC Slab

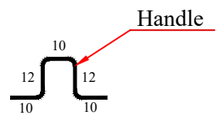

Handle

Funded by:	USAID/BHA	Drafted and Design BY:	IMC/WASH Team	Province	Laghman	Date	Sep/2022	Drawing Tile	Well Development
INTERNATIONAL MEDICAL CORPS (IMC) PROGRAM DEPARTMENT WASH UNIT		Review and Checked by:	Eng. Yousuf Mazhar	District	Alishing	Scale	A3-Shown	Sheet Title	Sections and details
		Review and Approved by:	Eng. Mohammad Yasir	Village	Shamakt Sharafuddin	Unit	Centimeters	Sheet #	----------

International Medical Corps

Note:

1-RCC Concrete Footing and Column M(1:1.5:3).
2-J-Anchor Bolt 16mm.
3-Deformed Grade 60 steel bar Dia.10mm according to drawing.
4-Steel angle iron (2"x2"x4mm).
5-Steel girder mini. sizing (10cmx4.5cmx8mm).
PCC M(1:2:4).
Foundation Compacted 95%.
Potable water used.

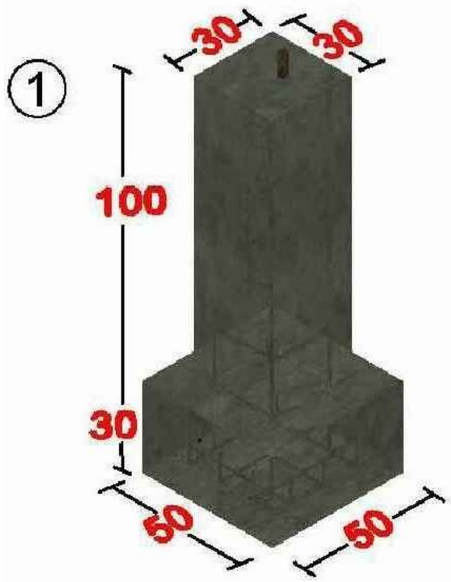

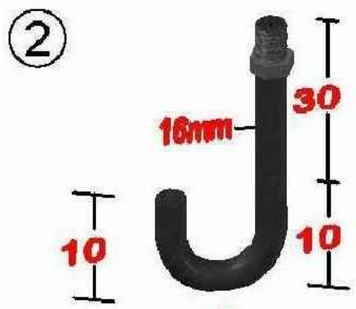

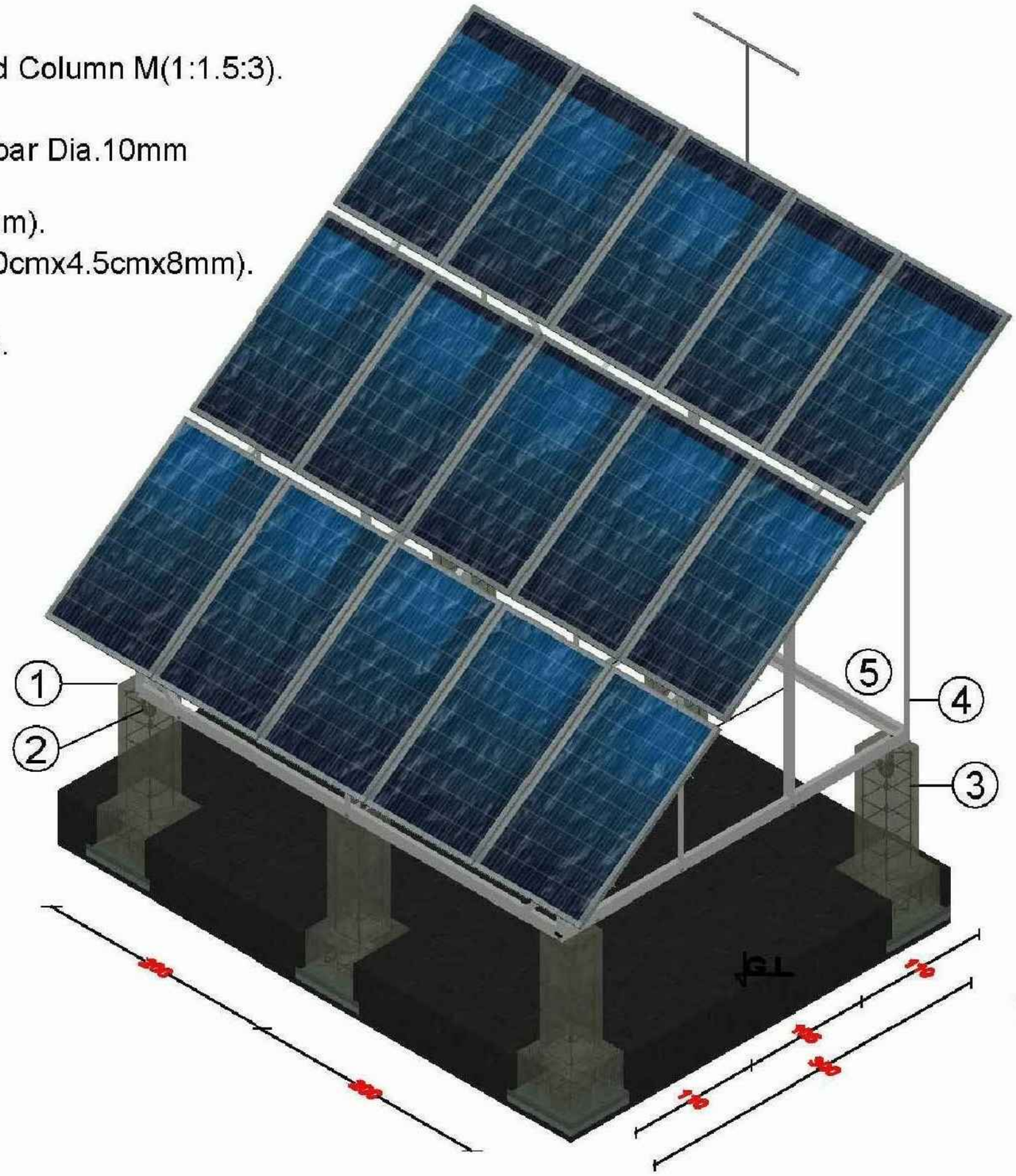

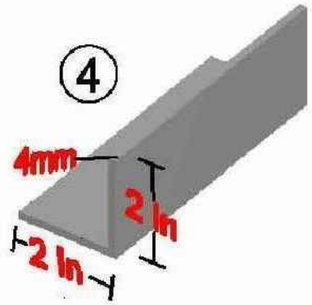

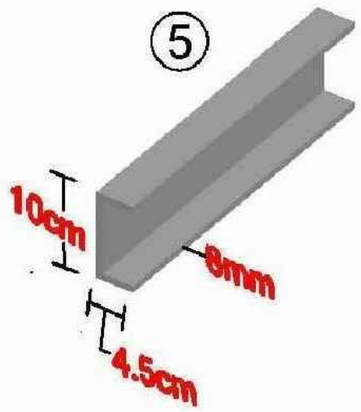

Funded by:	USAID/BHA	Drafted and Design BY:	IMC/WASH Team	Province	Laghman	Date	Sep/2022	Drawing Tile	Solar Frame	International Medical Corps	
INTERNATIONAL MEDICAL CORPS (IMC) PROGRAM DEPARTMENT WASH UNIT		Review and Checked by:	Eng. Yousuf Mazhar	District	Alishing	Scale	A3-Shown	Sheet Title	Frame 3 D		
		Review and Approved by:	Eng. Mohammad Yasir	Village	Shamakt Sharafuddin	Unit	Centimeters	Sheet #	-----		

A1

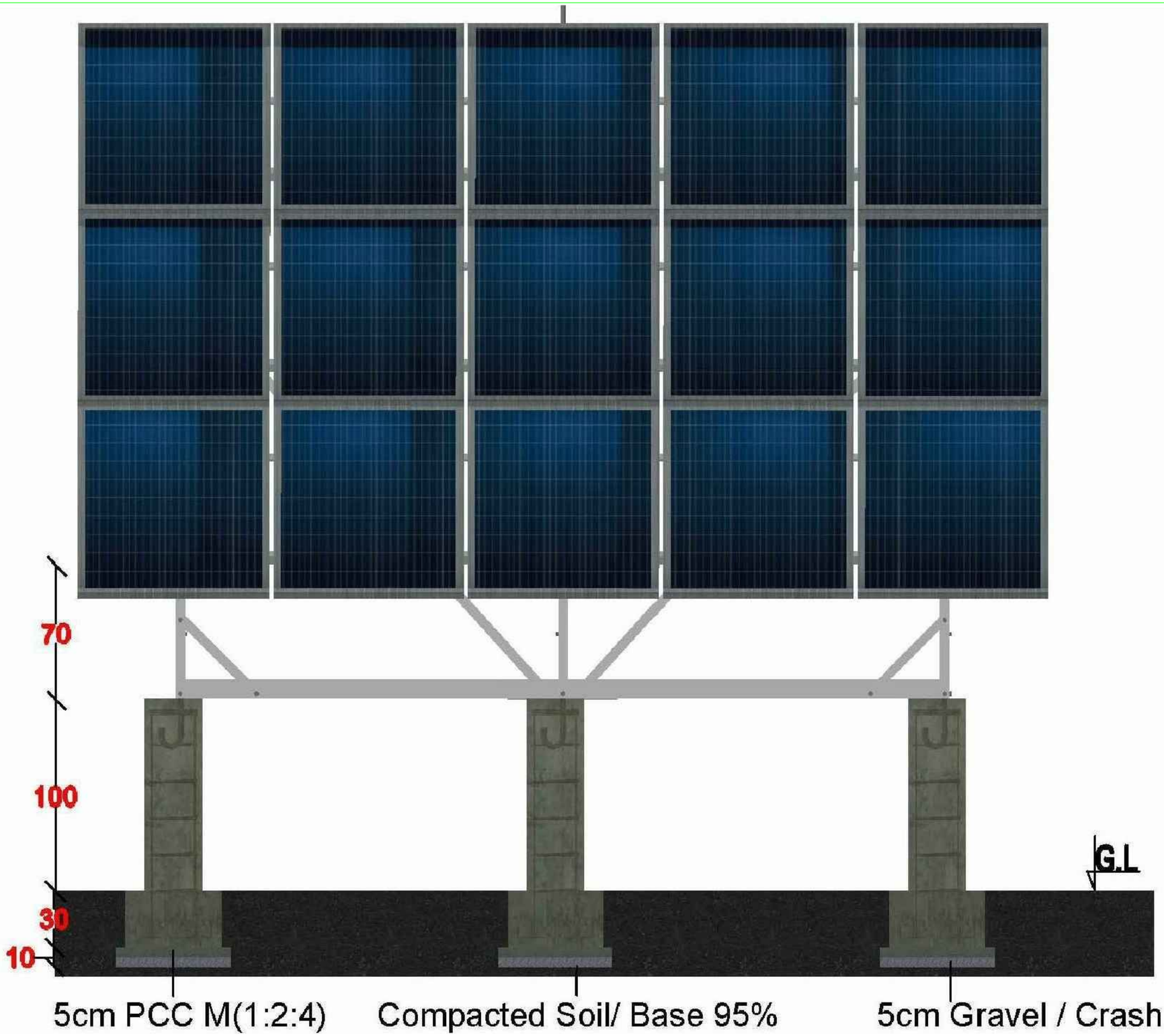

Funded by:	USAID/BHA	Drafted and Design BY:	IMC/WASH Team	Province	Laghman	Date	Sep/2022	Drawing Tile	Solar Frame	International Medical Corps	
INTERNATIONAL MEDICAL CORPS (IMC) PROGRAM DEPARTMENT WASH UNIT		Review and Checked by:	Eng. Yousuf Mazhar	District	Alishing	Scale	A3-Shown	Sheet Title	Fron View		
		Review and Approved by:	Eng. Mohammad Yasir	Village	Shamakt Sharafuddin	Unit	Centimeters	Sheet #	----------		

Angle Θ = According to bidder solar system design

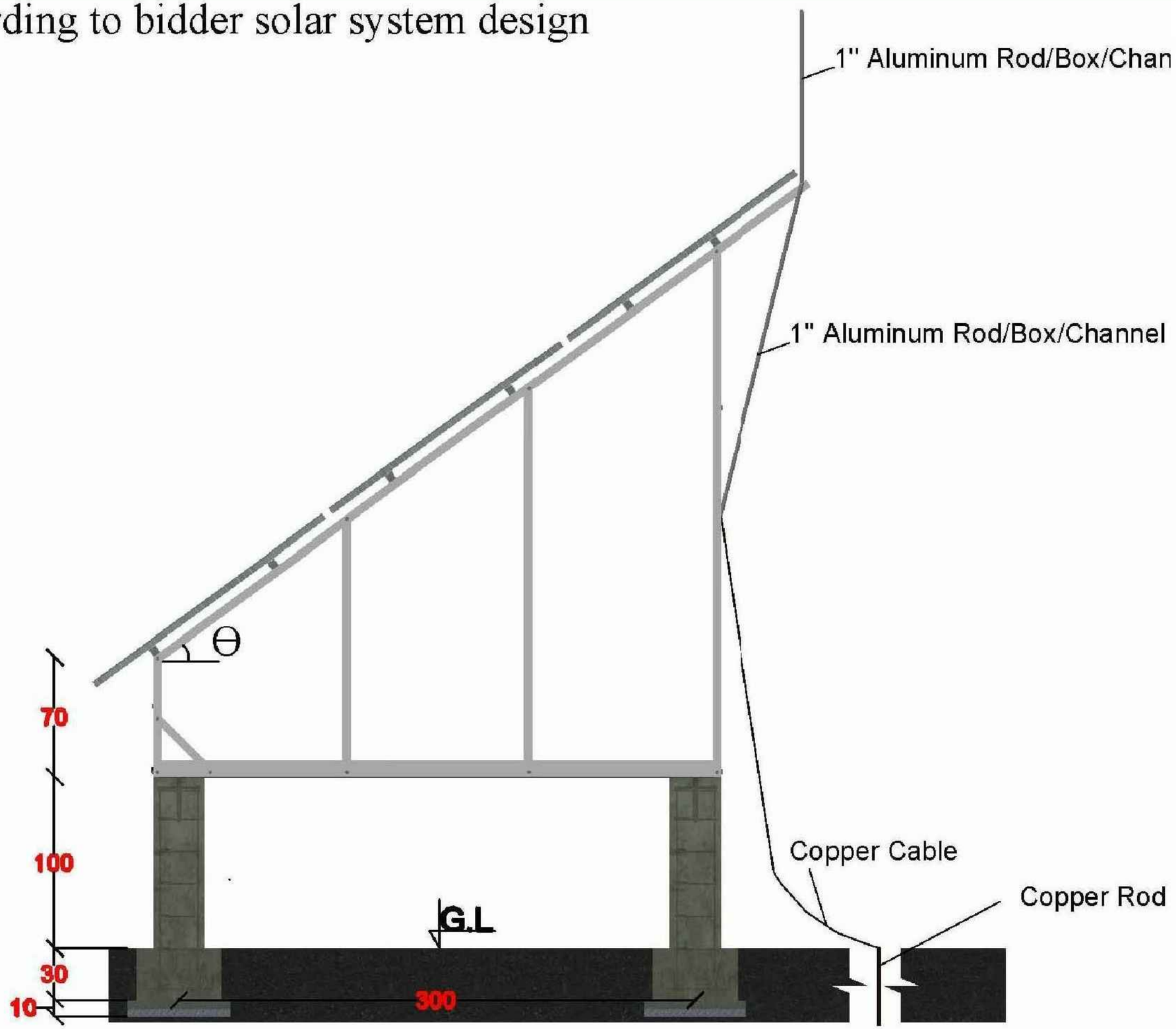

Funded by:	USAID/BHA	Drafted and Design BY:	IMC/WASH Team	Province	Laghman	Date	Sep/2022	Drawing Tile	Solar Frame
INTERNATIONAL MEDICAL CORPS (IMC) PROGRAM DEPARTMENT WASH UNIT		Review and Checked by:	Eng. Yousuf Mazhar	District	Alishing	Scale	A3-Shown	Sheet Title	Side View
		Review and Approved by:	Eng. Mohammad Yasir	Village	Shamakt Sharafuddin	Unit	Centimeters	Sheet #	----------

International Medical Corps

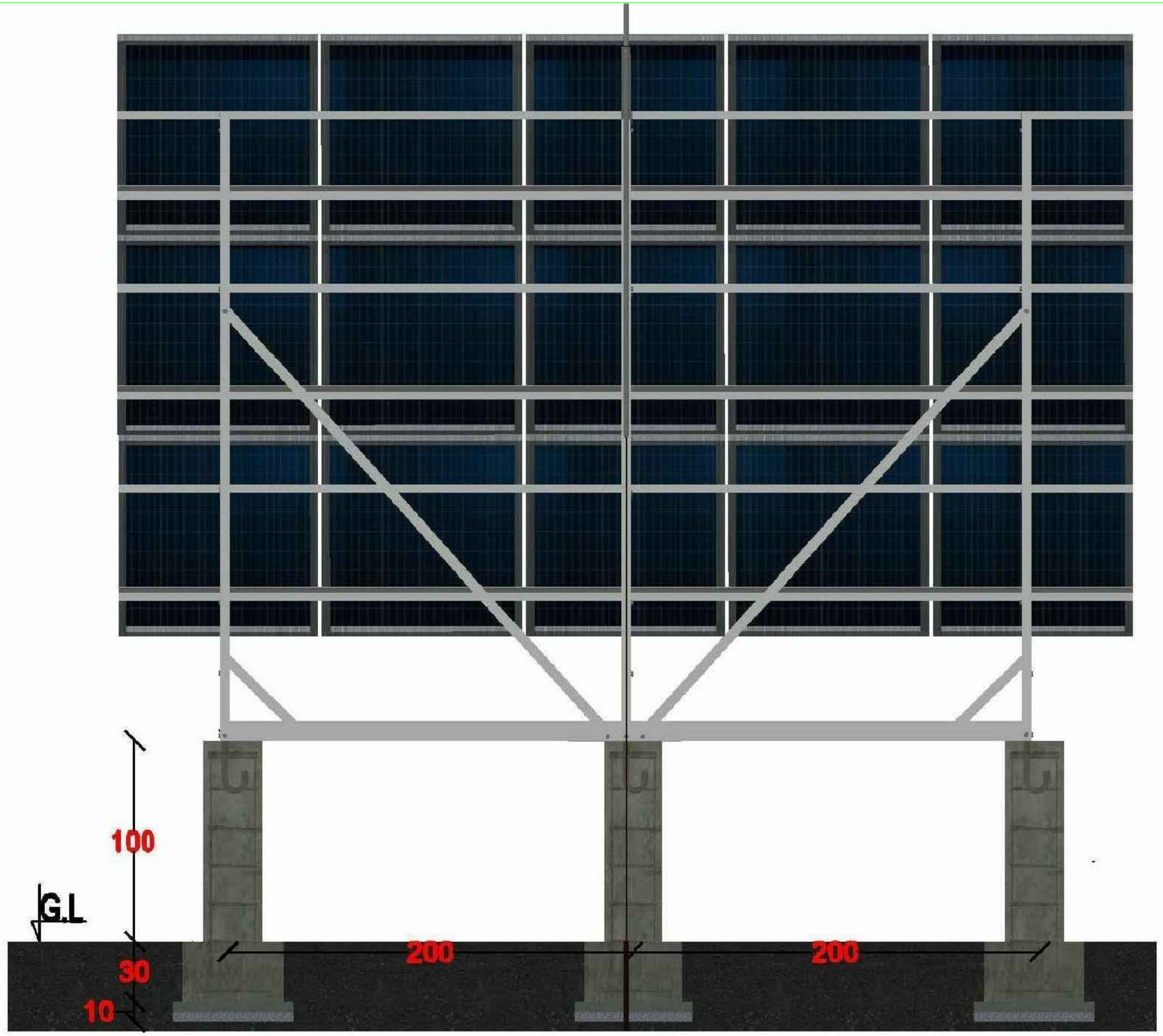

Funded by:	USAID/BHA	Drafted and Design BY:	IMC/WASH Team	Province	Laghman	Date	Sep/2022	Drawing Tile	Solar Frame
INTERNATIONAL MEDICAL CORPS (IMC) PROGRAM DEPARTMENT WASH UNIT		Review and Checked by:	Eng. Yousuf Mazhar	District	Alishing	Scale	A3-Shown	Sheet Title	Back View
		Review and Approved by:	Eng. Mohammad Yasir	Village	Shamakt Sharafuddin	Unit	Centimeters	Sheet #	----------

International Medical Corps