INTERNATIONAL MEDICAL CORPS
WASH PROGRAM
KARANJ SOLAR POWERED WATER SUPPLY SYSTEM

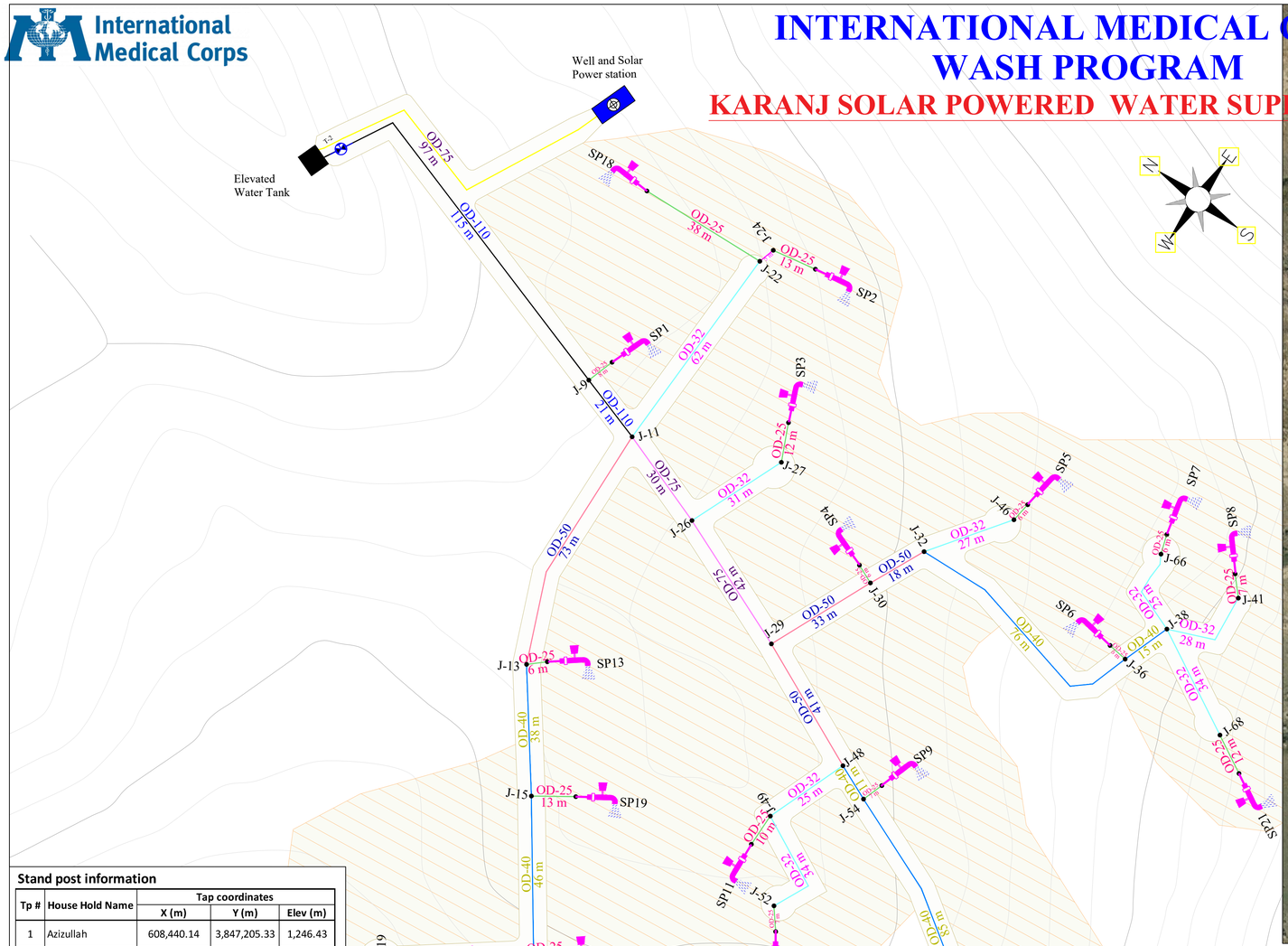

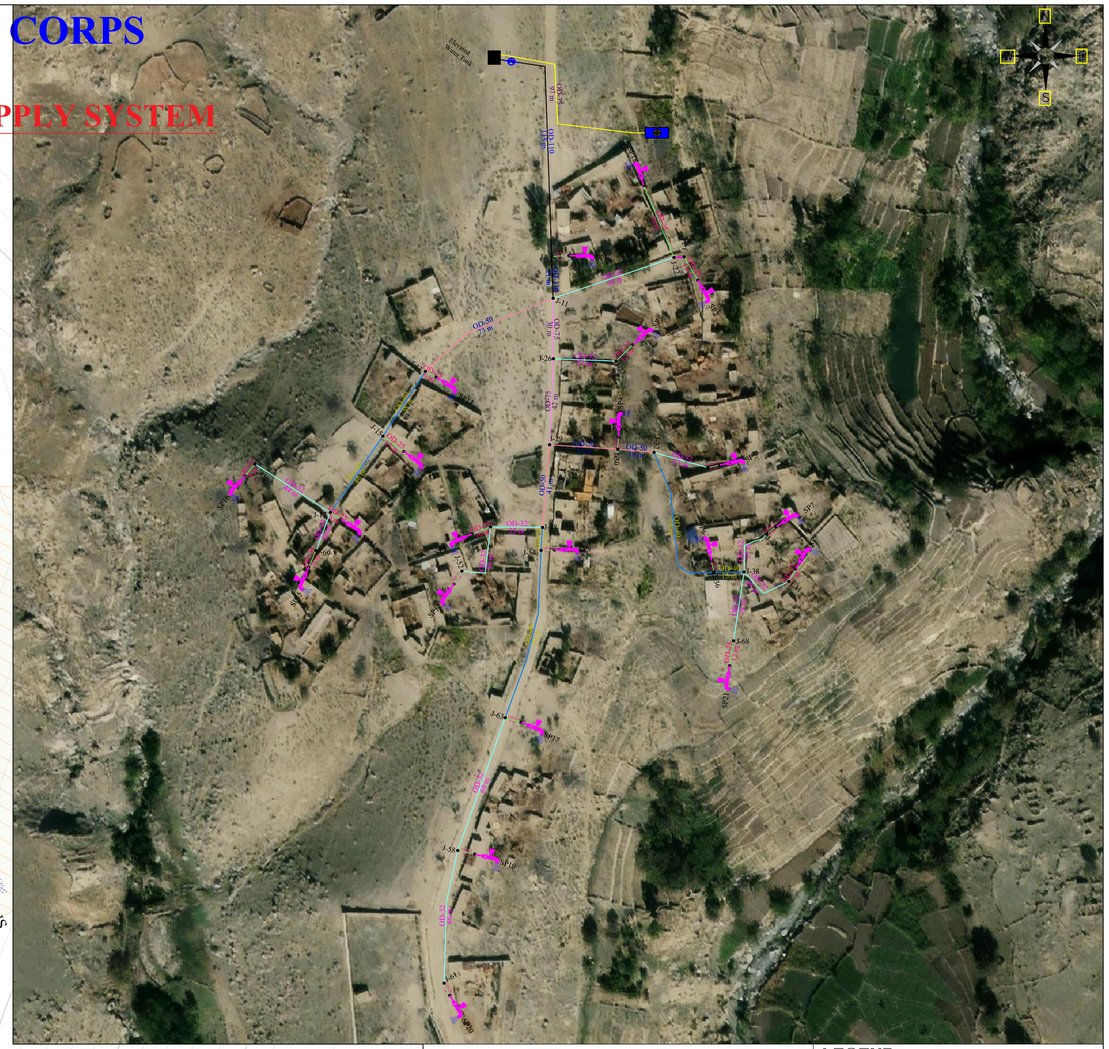
Elevated Water Tank
T-2
OD-75 97 m
OD-110 115 m
OD-90 23 m
OD-90 50 m
OD-90 50 m
OD-90 50

Note:

- All dimension are in cm.
- Mark of concrete M(1:1.5:3).
- Mark of Plain concrete PCC M(1:2:4)
- Safe bearing capacity of Soil in foundation is not less then 2 kg/cm2.
- Steel bar Mark Grade not less then 60 Kips.
- Plastering work of Elevated Tank & boundary Wall with M(1:4) cement + sand mortar.
- Out let pipe and Suction pipe should be protected (Isolation) with GI iron sheet.
- Inside plastering of Elevated Tank is two times with M(1:4) cement + sand mortar first time and second time M(1:1:1) cement + marble powder + zero # stone (Cheps) mortar due to not leakages in the future

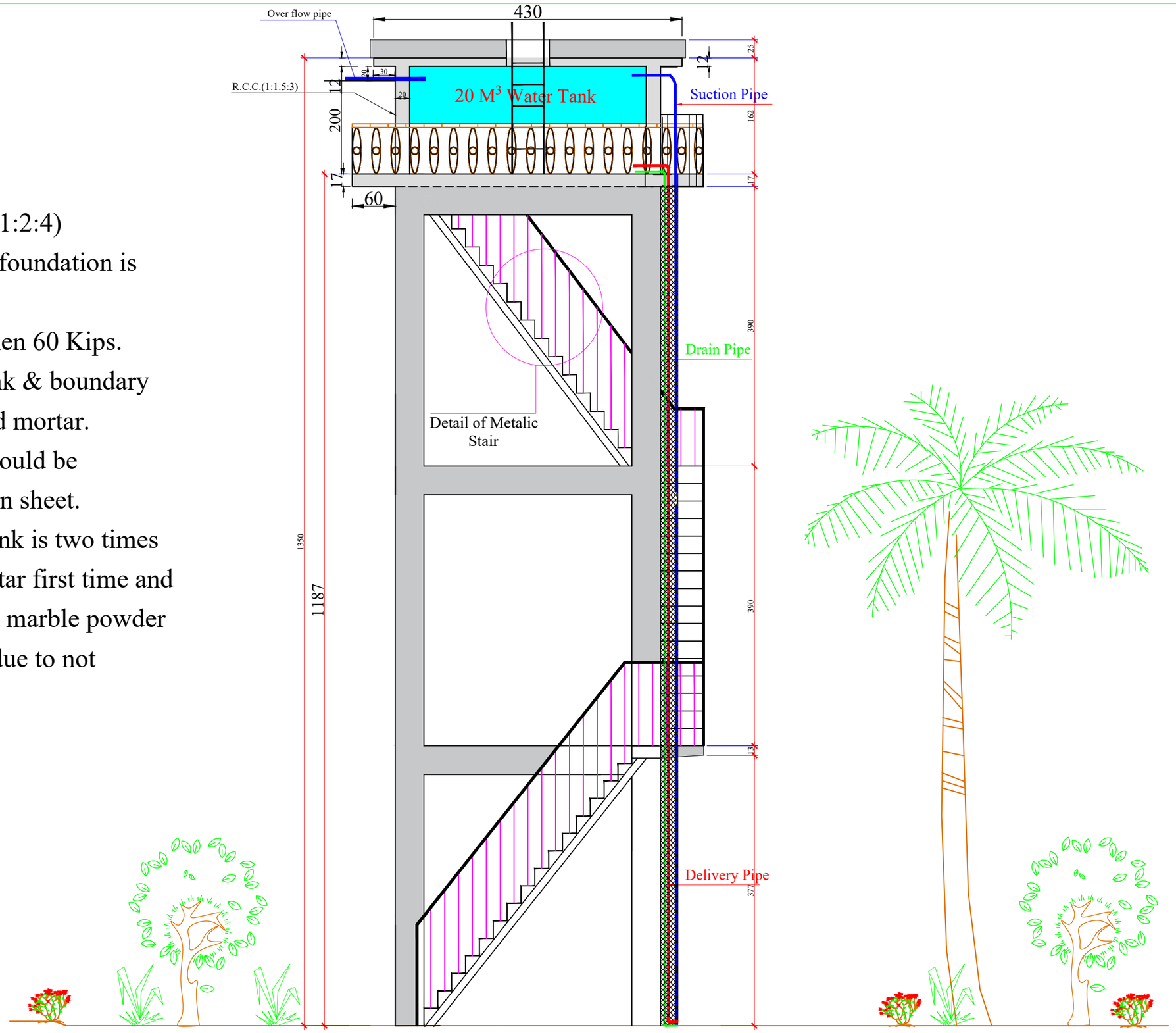

Funded by:	USAID/BHA	Drafted and Design BY:	IMC/WASH Team	Province	Laghman	Date	Sep/2022	Drawing Tile	Elevated 20 M3 Tank	International Medical Corps	
INTERNATIONAL MEDICAL CORPS (IMC) PROGRAM DEPARTMENT WASH UNIT		Review and Checked by:	Eng. Yousuf Mazhar	District	Mehterlam	Scale	A3-shown	Sheet Title	Front View		
		Review and Approved by:	Eng. Mohammad Yasir	Village	Karanj	Unit	Centimeters	Sheet #	01		

Foundation Plan of Elevated Water Tank

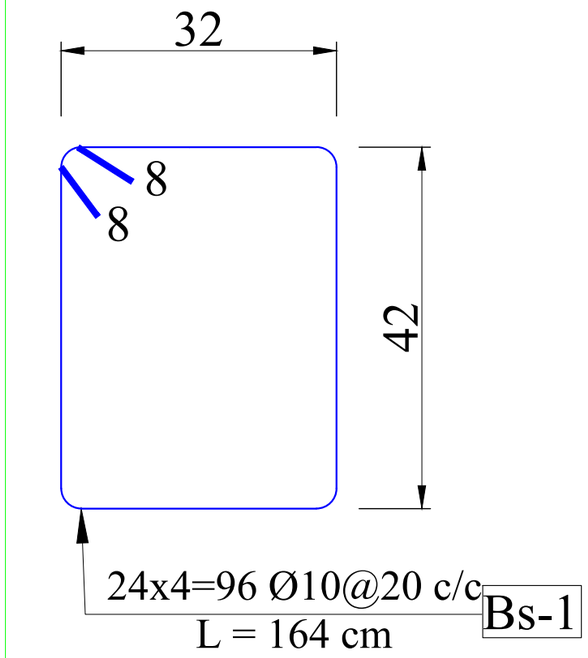

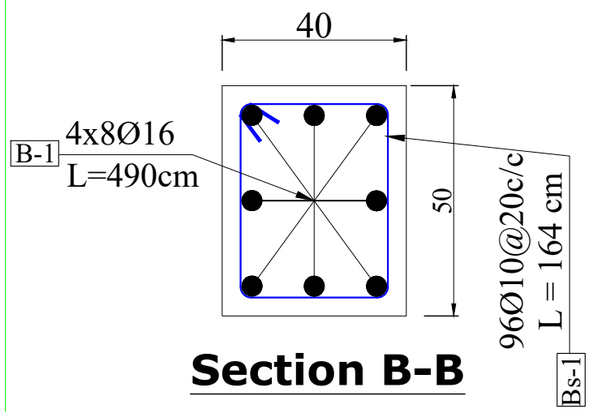

Section B-B

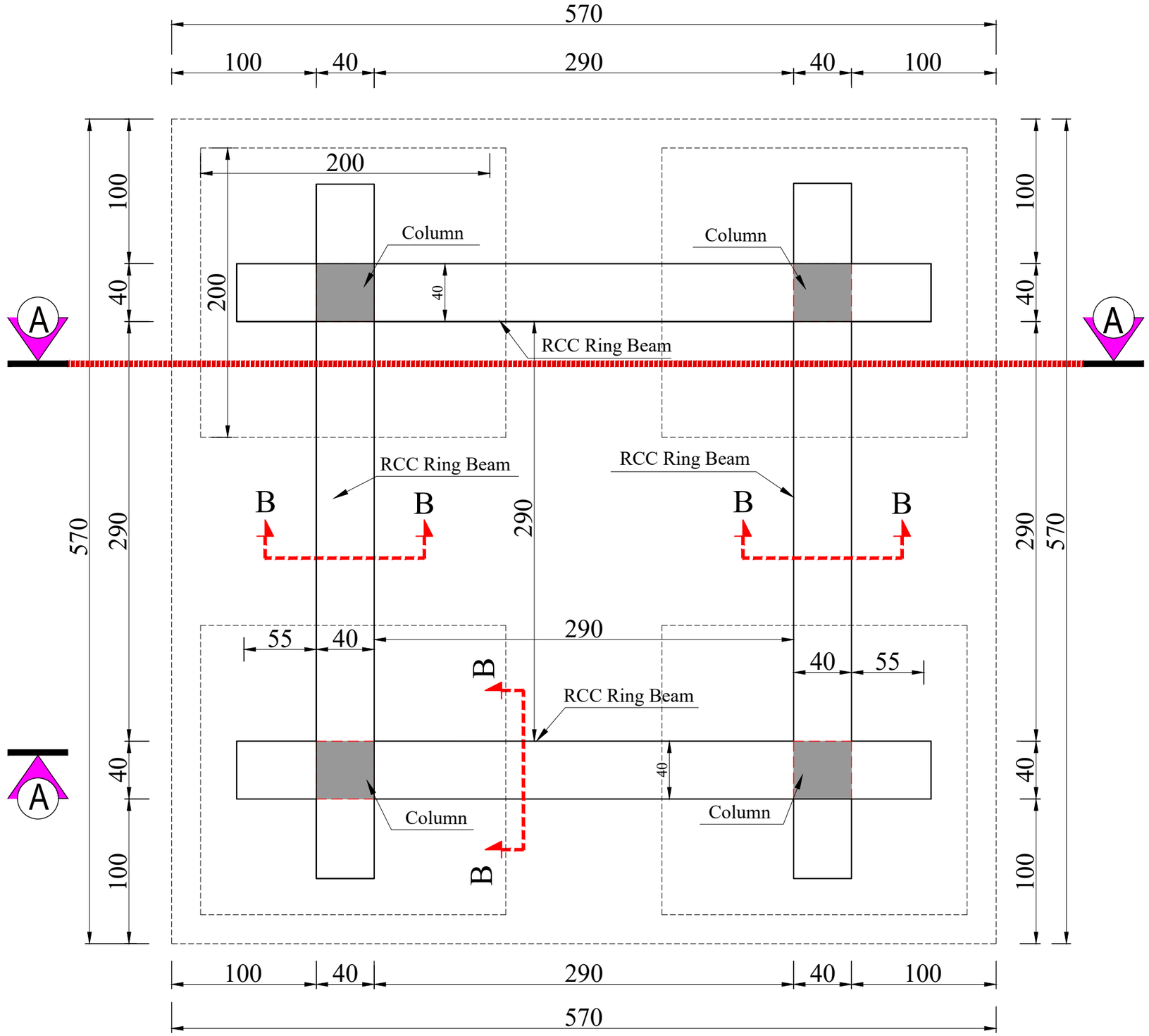

Funded by:	USAID/BHA	Drafted and Design BY:	IMC/WASH Team	Province	Laghman	Date	Sep/2022	Drawing Tile	Elevated 20 M3
INTERNATIONAL MEDICAL CORPS (IMC) PROGRAM DEPARTMENT WASH UNIT		Review and Checked by:	Eng. Yousuf Mazhar	District	Mehterlam	Scale	A3-Shown	Sheet Title	Foundation Plan
		Review and Approved by:	Eng. Mohammad Yasir	Village	Karanj	Unit	Centimeters	Sheet #	------

International Medical Corps

Reinforcement Plan of Footing

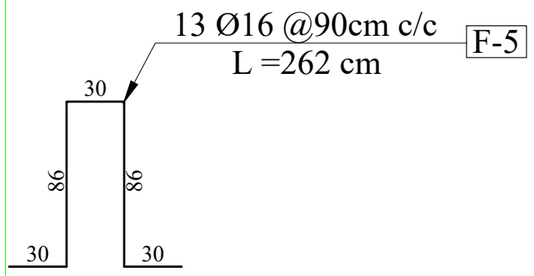

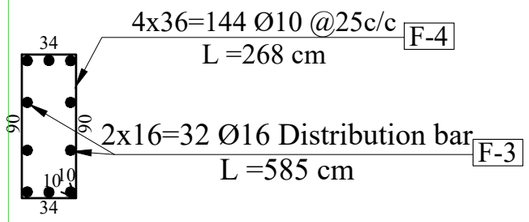

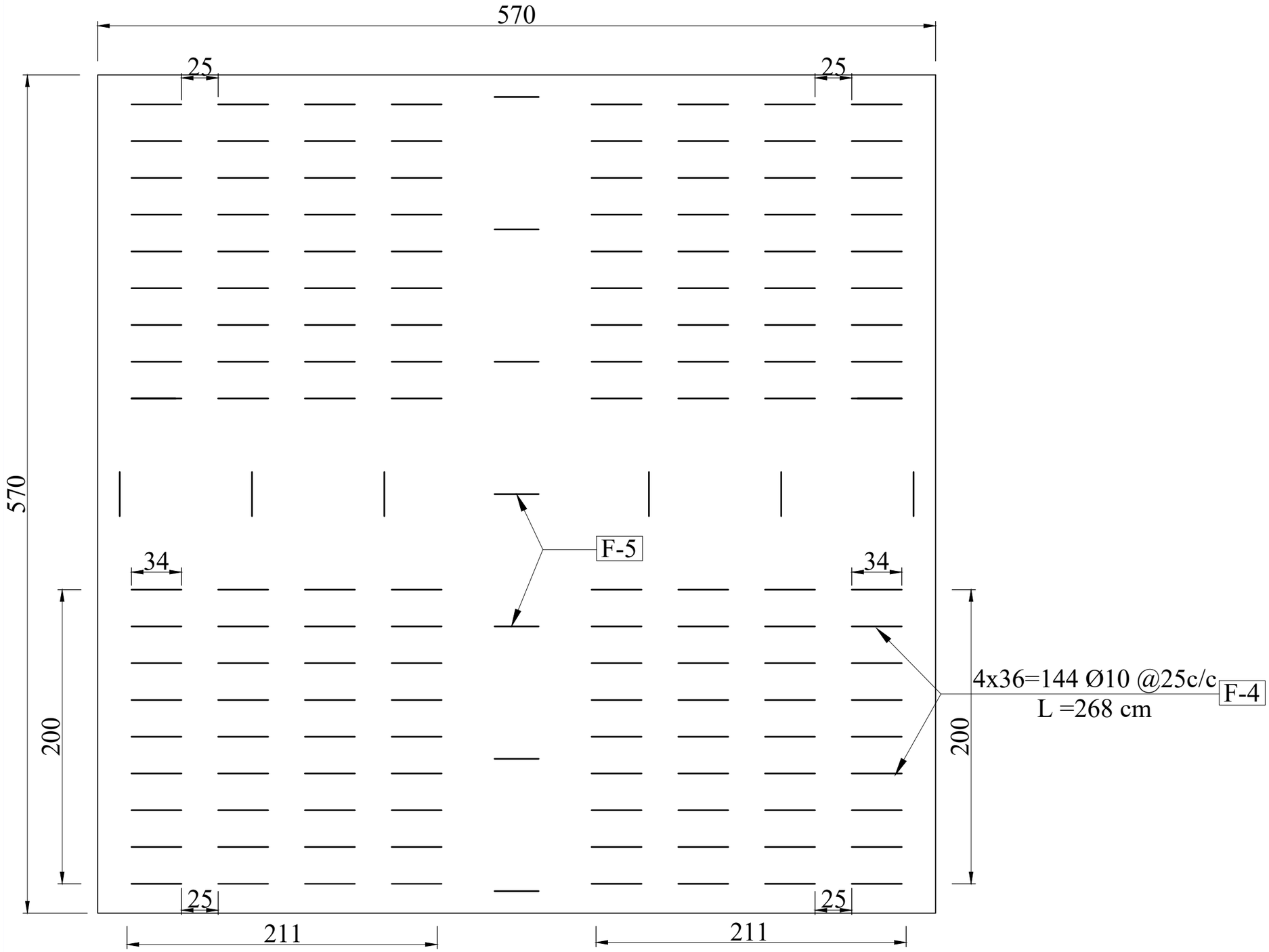

Funded by:	USAID/BHA	Drafted and Design BY:	IMC/WASH Team	Province	Laghman	Date	Sep/2022	Drawing Tile	Elevated 20 M3
INTERNATIONAL MEDICAL CORPS (IMC) PROGRAM DEPARTMENT WASH UNIT		Review and Checked by:	Eng. Yousuf Mazhar	District	Mehterlam	Scale	A3-Shown	Sheet Title	Foundation Reinfor.
		Review and Approved by:	Eng. Mohammad Yasir	Village	Karanj	Unit	Centimeters	Sheet #	---------

International Medical Corps

Reinforcement Plan of Footing

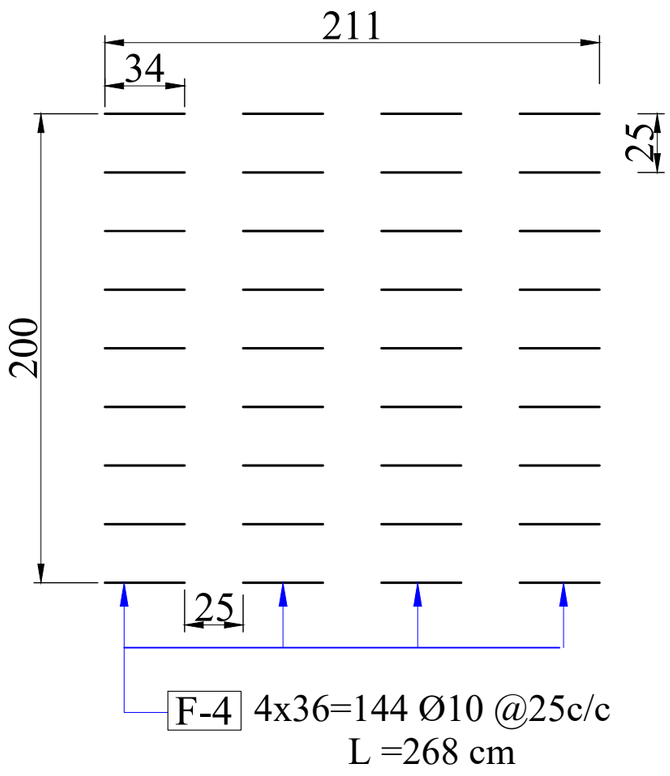

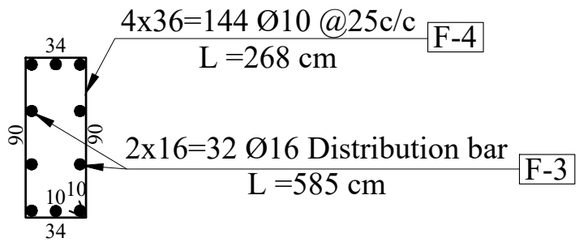

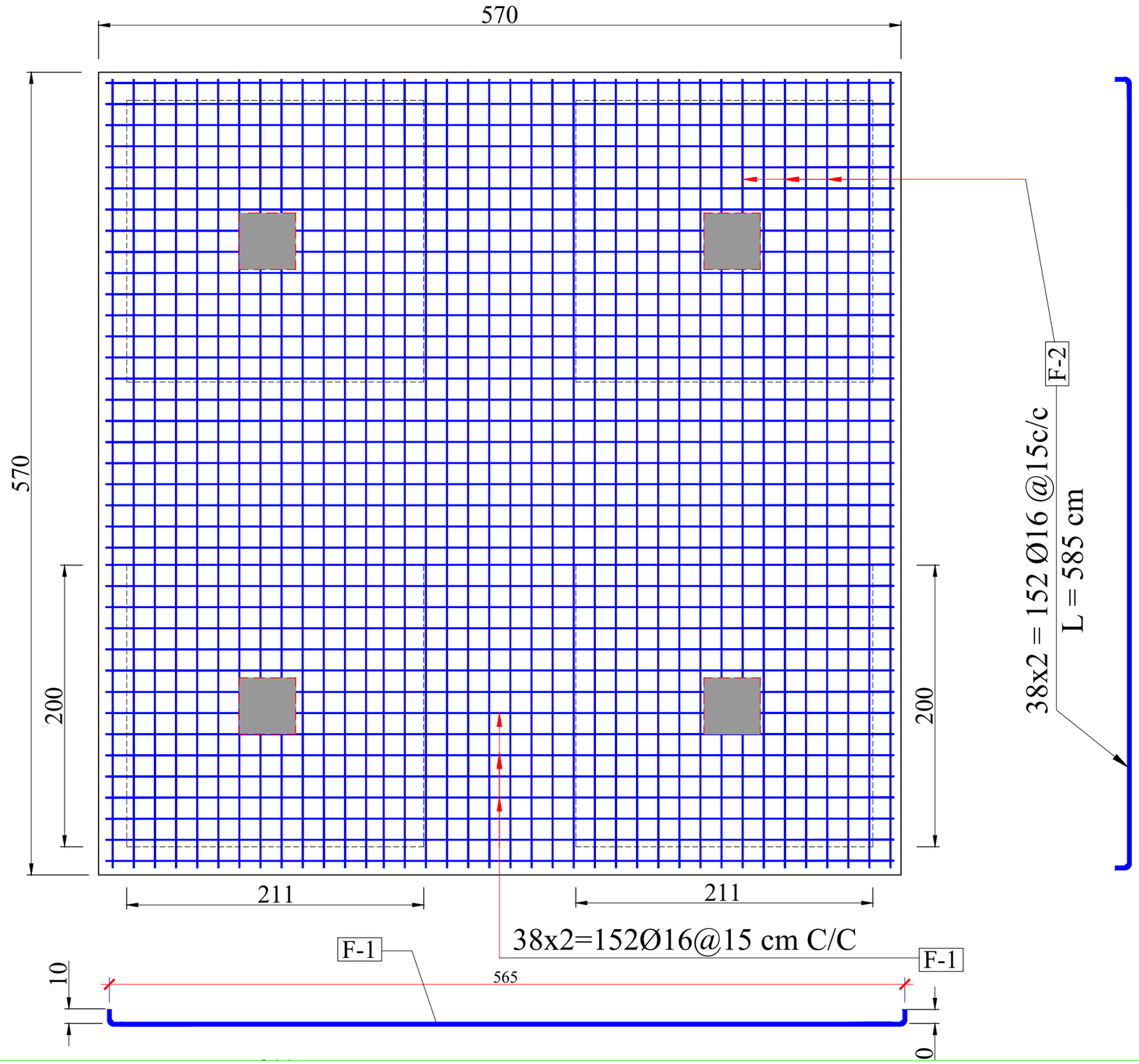

Funded by:	USAID/BHA	Drafted and Design BY:	IMC/WASH Team	Province	Laghman	Date	Sep/2022	Drawing Tile	Elevated 20 M3
INTERNATIONAL MEDICAL CORPS (IMC) PROGRAM DEPARTMENT WASH UNIT		Review and Checked by:	Eng. Yousuf Mazhar	District	Mehterlam	Scale	A3-Shown	Sheet Title	Foundation Reinf.
		Review and Approved by:	Eng. Mohammad Yasir	Village	Karanj	Unit	Centimeters	Sheet #	---------

International Medical Corps

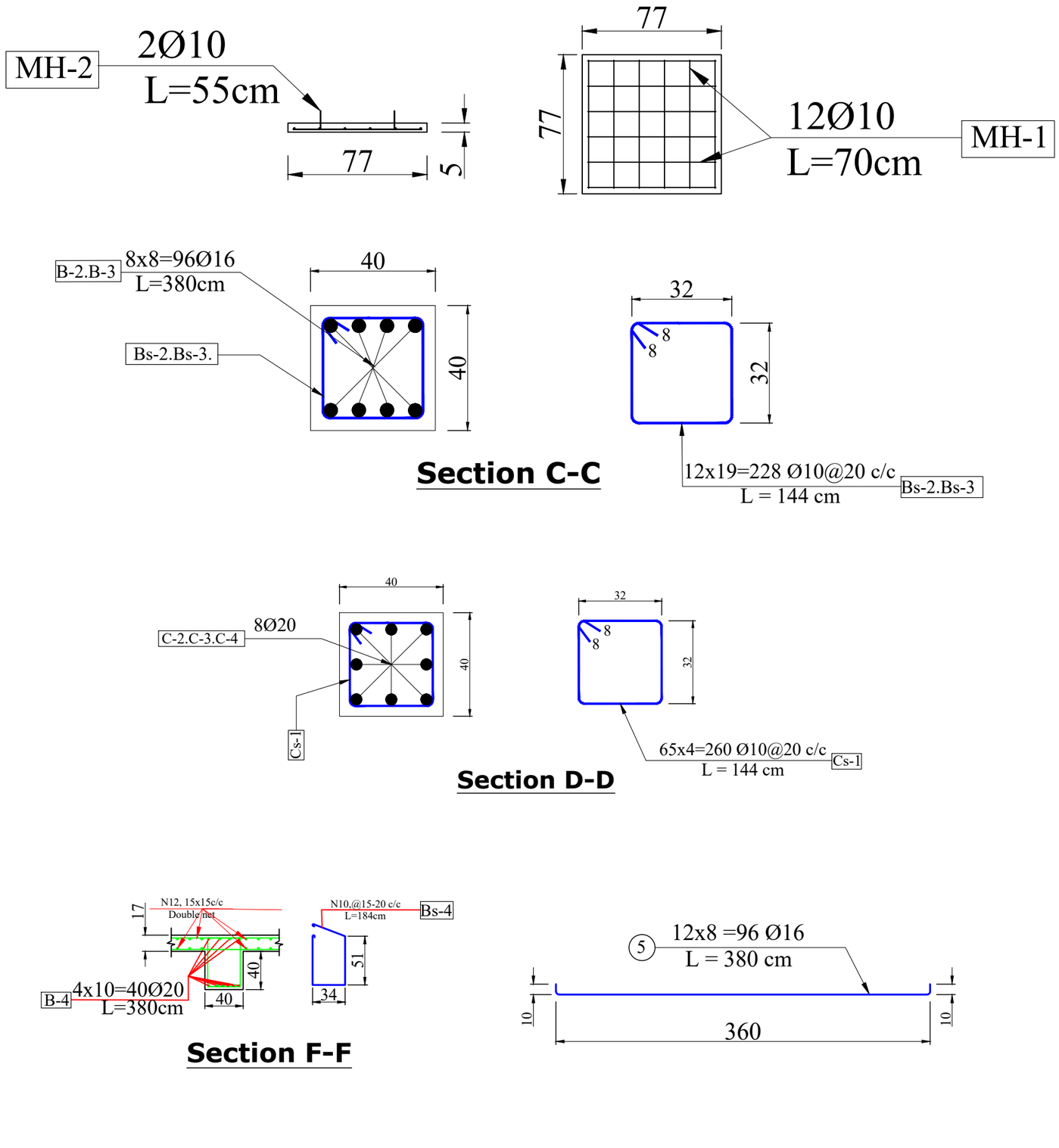

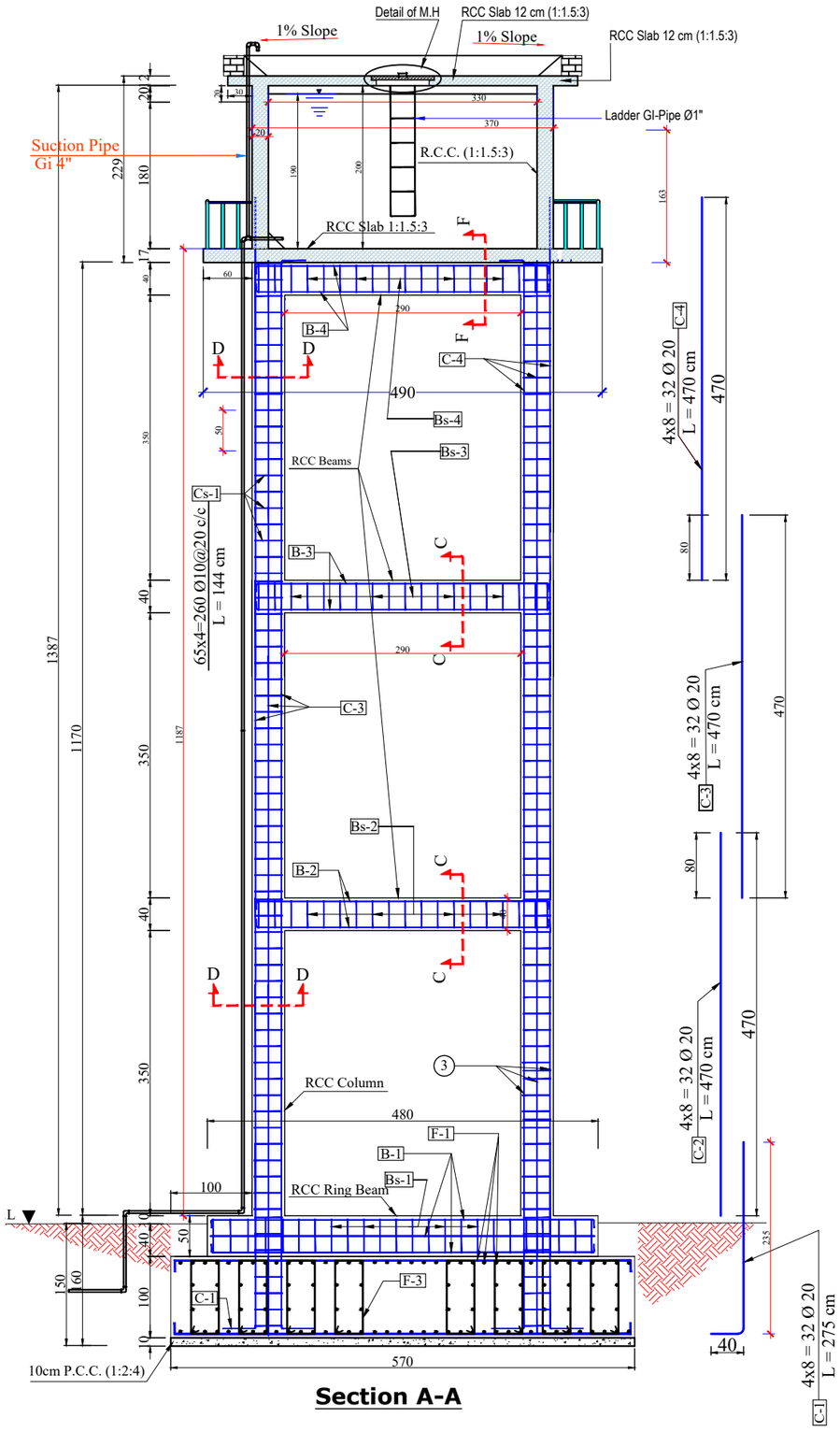

Funded by:	USAID/BHA	Drafted and Design BY:	IMC/WASH Team	Province	Laghman	Date	Sep/2022	Drawing Tile	Elevated 20 M3
INTERNATIONAL MEDICAL CORPS (IMC) PROGRAM DEPARTMENT WASH UNIT		Review and Checked by:	Eng. Yousuf Mazhar	District	Mehterlam	Scale	A3-Shown	Sheet Title	Section A-A
		Review and Approved by:	Eng. Mohammad Yasir	Village	Karanj	Unit	Centimeters	Sheet #	---------

International Medical Corps

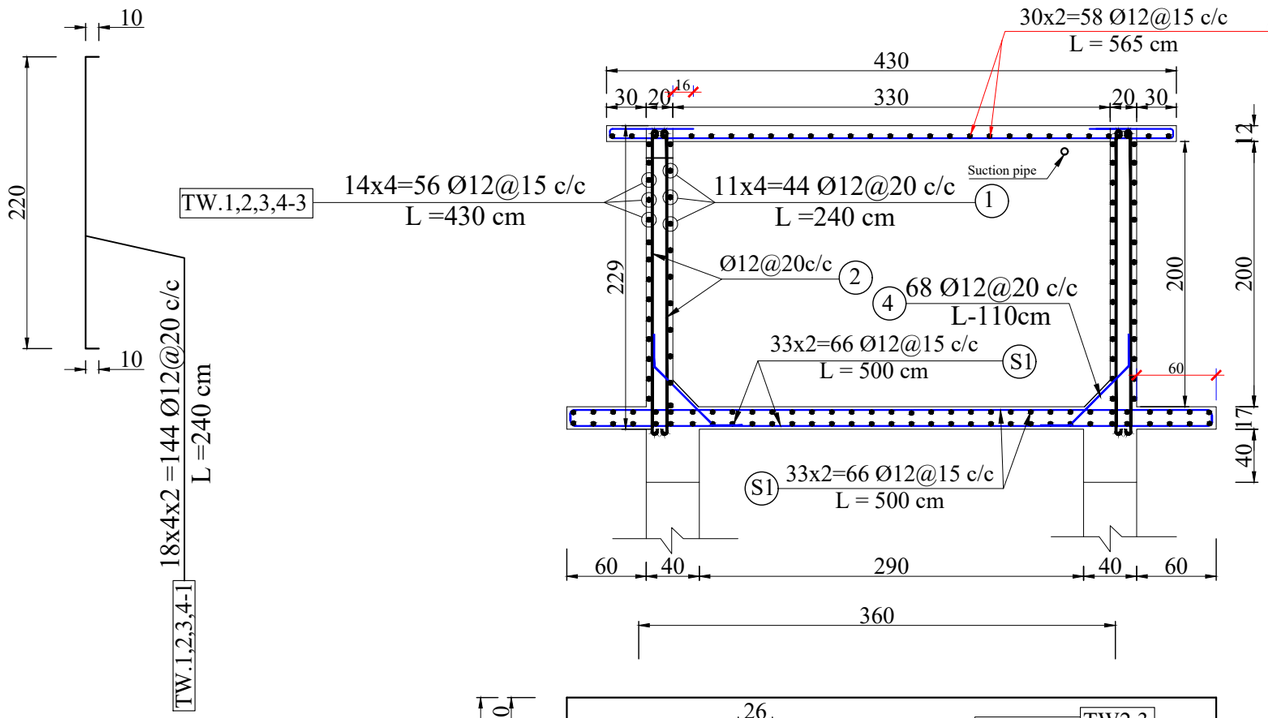

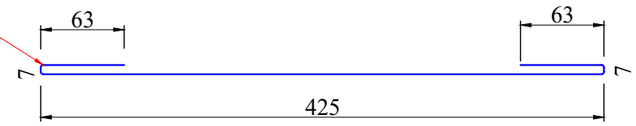

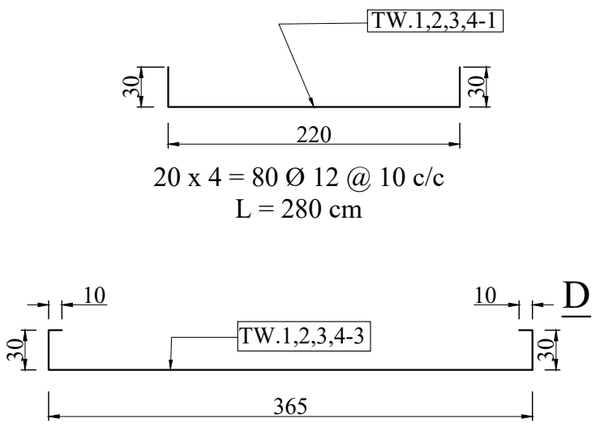

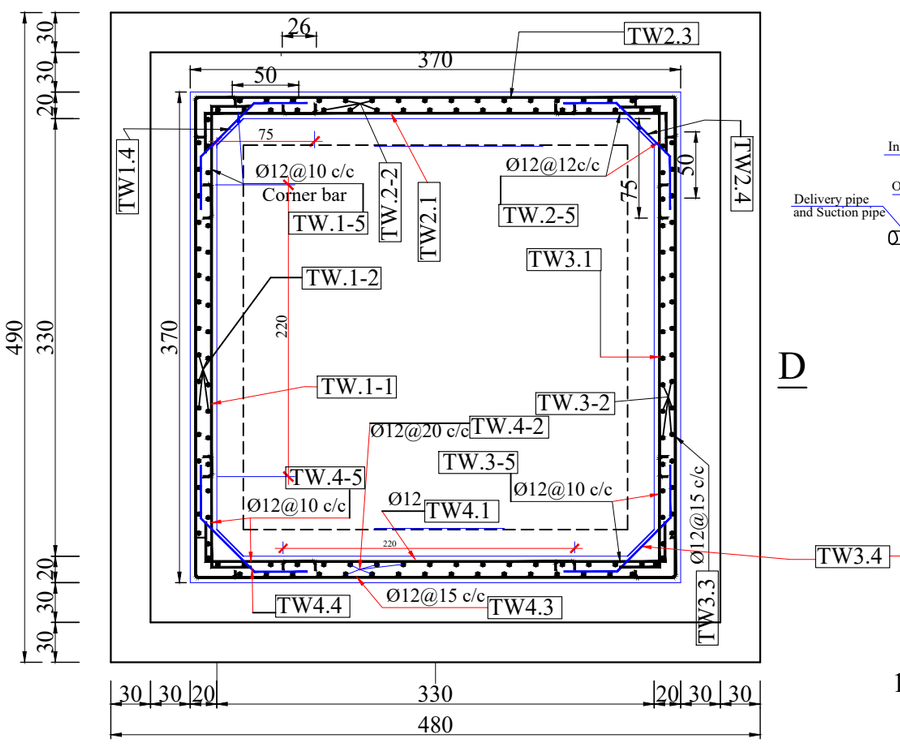

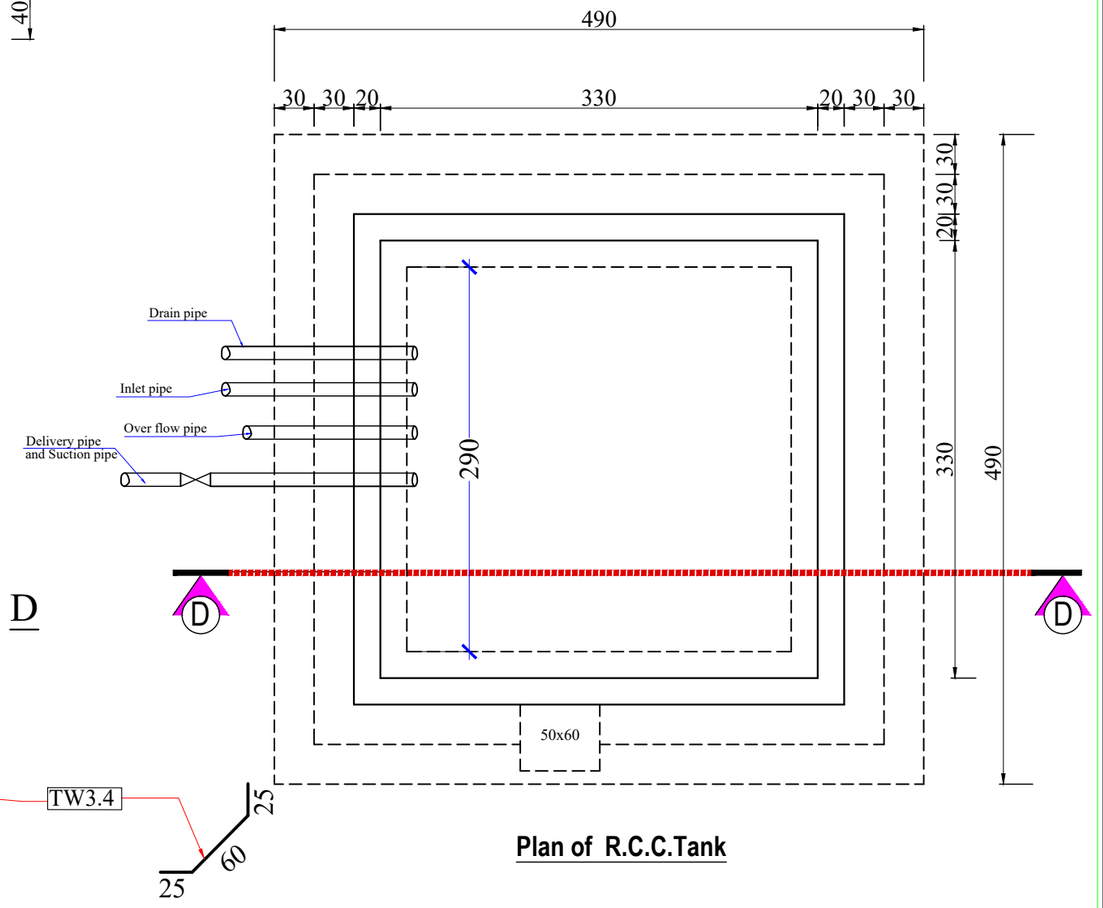

Plan of R.C.C.Tank

Reinforcement Plan of Water Tank

Funded by:	USAID/BHA	Drafted and Design BY:	IMC/WASH Team	Province	Laghman	Date	Sep/2022	Drawing Tile	Elevated 20 M3
INTERNATIONAL MEDICAL CORPS (IMC) PROGRAM DEPARTMENT WASH UNIT		Review and Checked by:	Eng. Yousuf Mazhar	District	Mehterlam	Scale	A3-Shown	Sheet Title	Tank Reinfro.
		Review and Approved by:	Eng. Mohammad Yasir	Village	Karanj	Unit	Centimeters	Sheet #	---------

International Medical Corps

Stair Case Landing Reinforcement Details

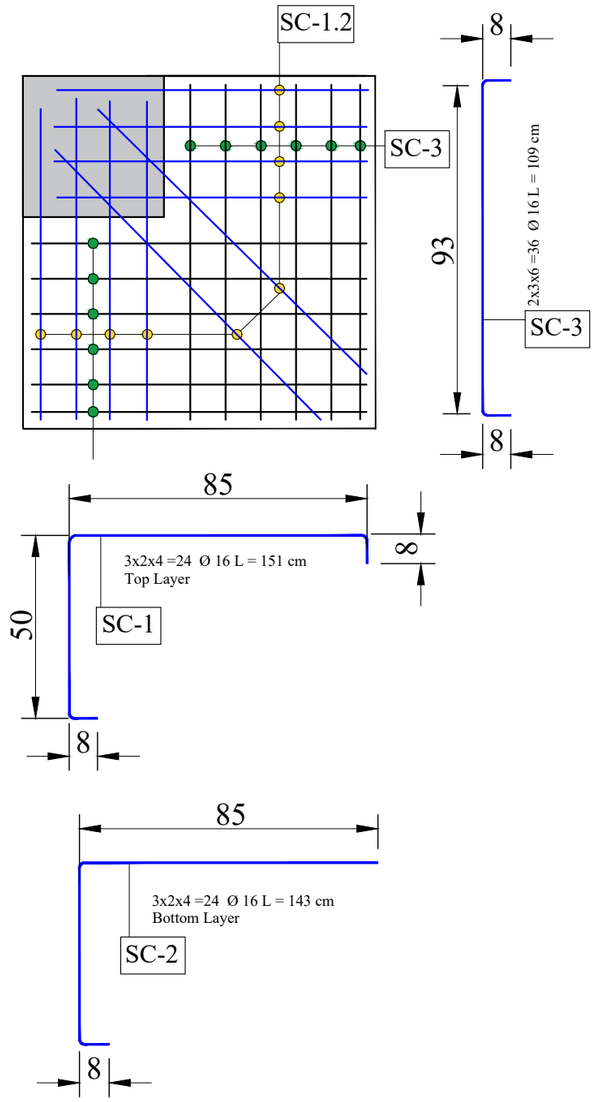

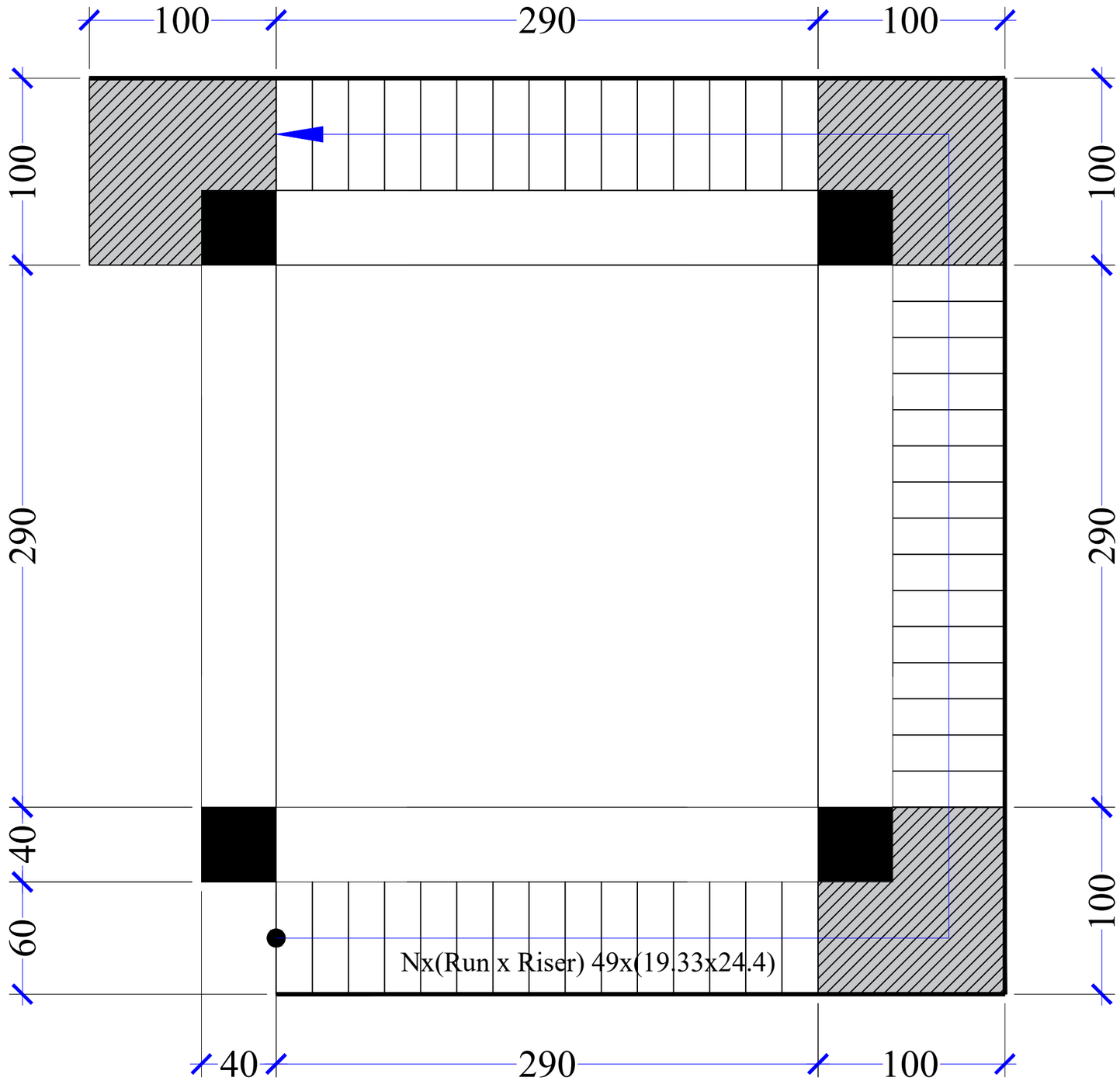

Stair Case Plan

Funded by:	USAID/BHA	Drafted and Design BY:	IMC/WASH Team	Province	Laghman	Date	Sep/2022	Drawing Tile	Elevated 20 M3	International Medical Corps	
INTERNATIONAL MEDICAL CORPS (IMC) PROGRAM DEPARTMENT WASH UNIT		Review and Checked by:	Eng. Yousuf Mazhar	District	Mehterlam	Scale	A3-Shown	Sheet Title	Stair Plan		
		Review and Approved by:	Eng. Mohammad Yasir	Village	Karanj	Unit	Centimeters	Sheet #	---------		

DETAIL--B

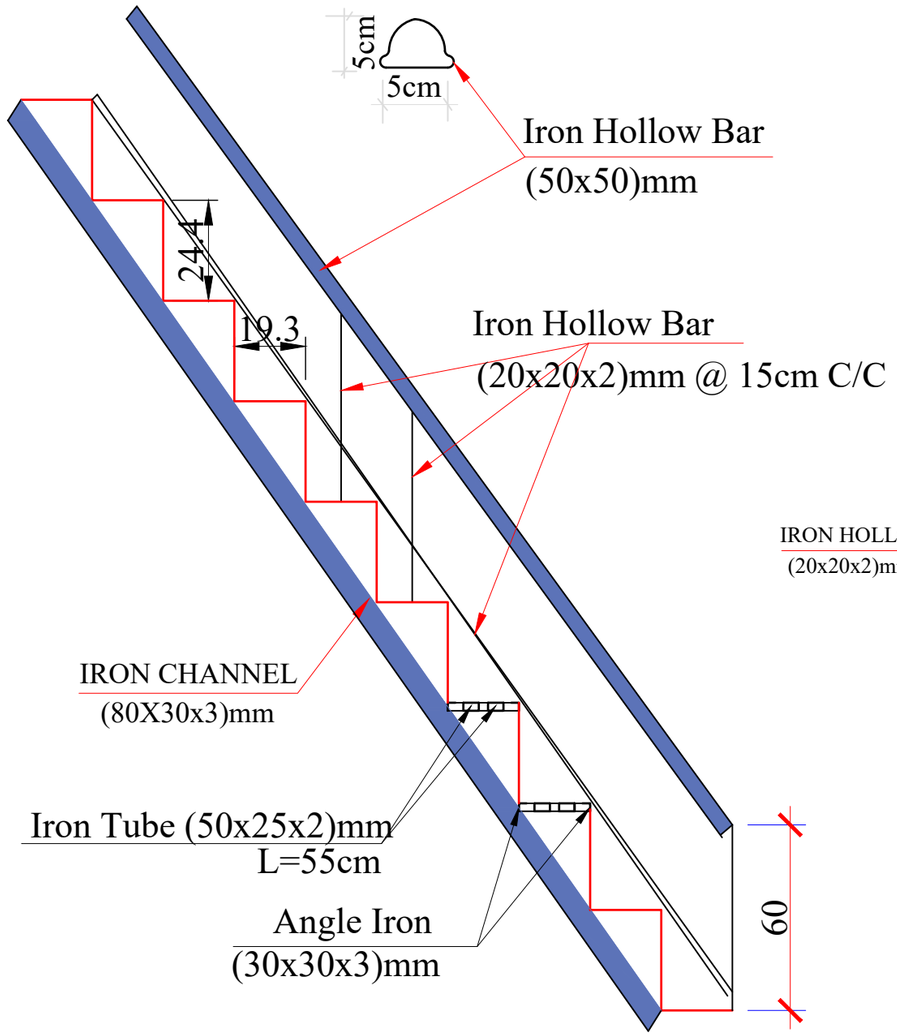

DOOR FOR STAIR CASE

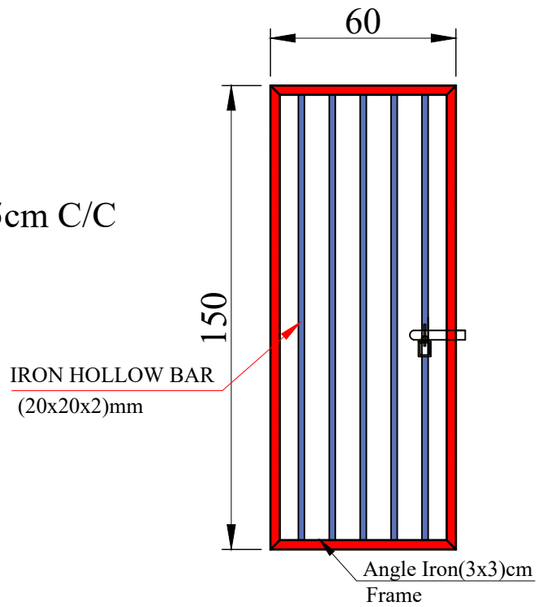

DETAIL--C

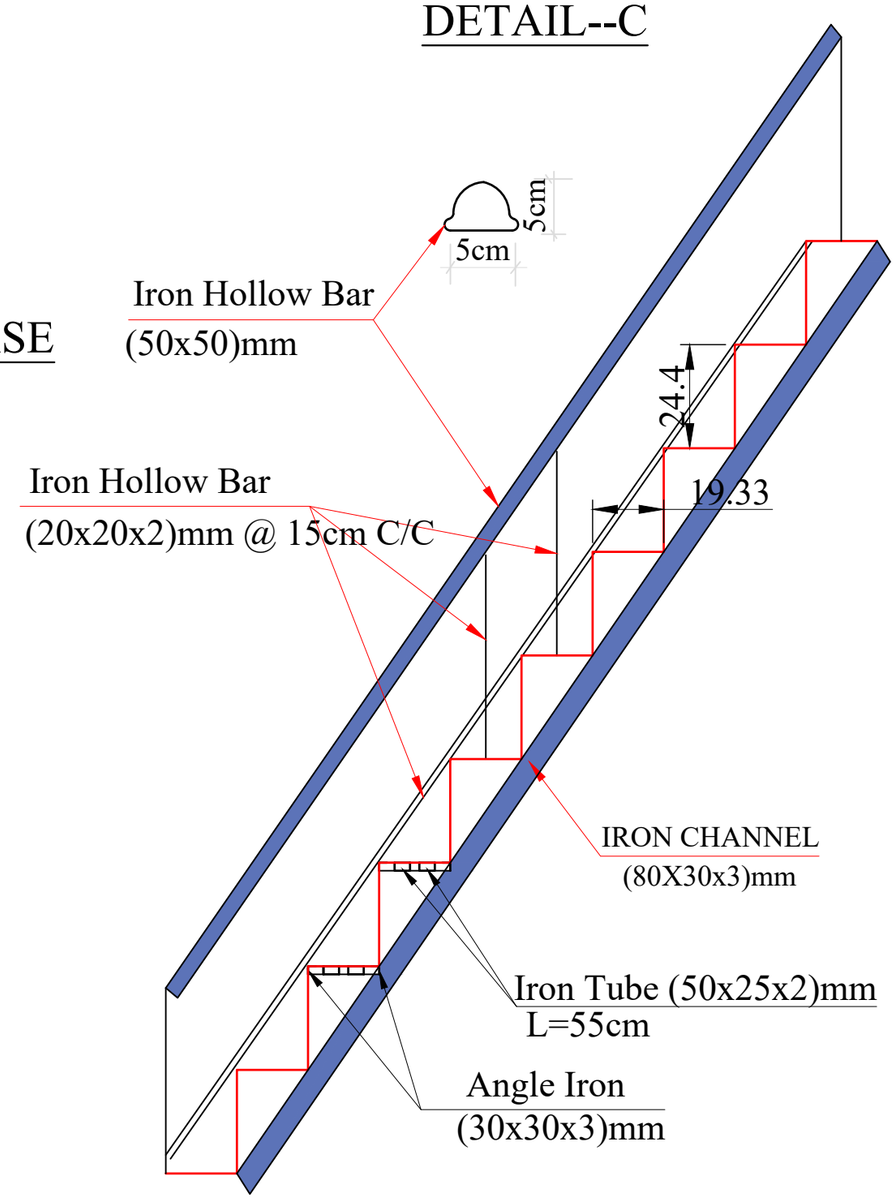

Funded by:	USAID/BHA	Drafted and Design BY:	IMC/WASH Team	Province	Laghman	Date	Sep/2022	Drawing Tile	Elevated 20 M3
INTERNATIONAL MEDICAL CORPS (IMC) PROGRAM DEPARTMENT WASH UNIT		Review and Checked by:	Eng. Yousuf Mazhar	District	Mehterlam	Scale	A3-Shown	Sheet Title	Stair Section
		Review and Approved by:	Eng. Mohammad Yasir	Village	Karanj	Unit	Centimeters	Sheet #	---------

International Medical Corps

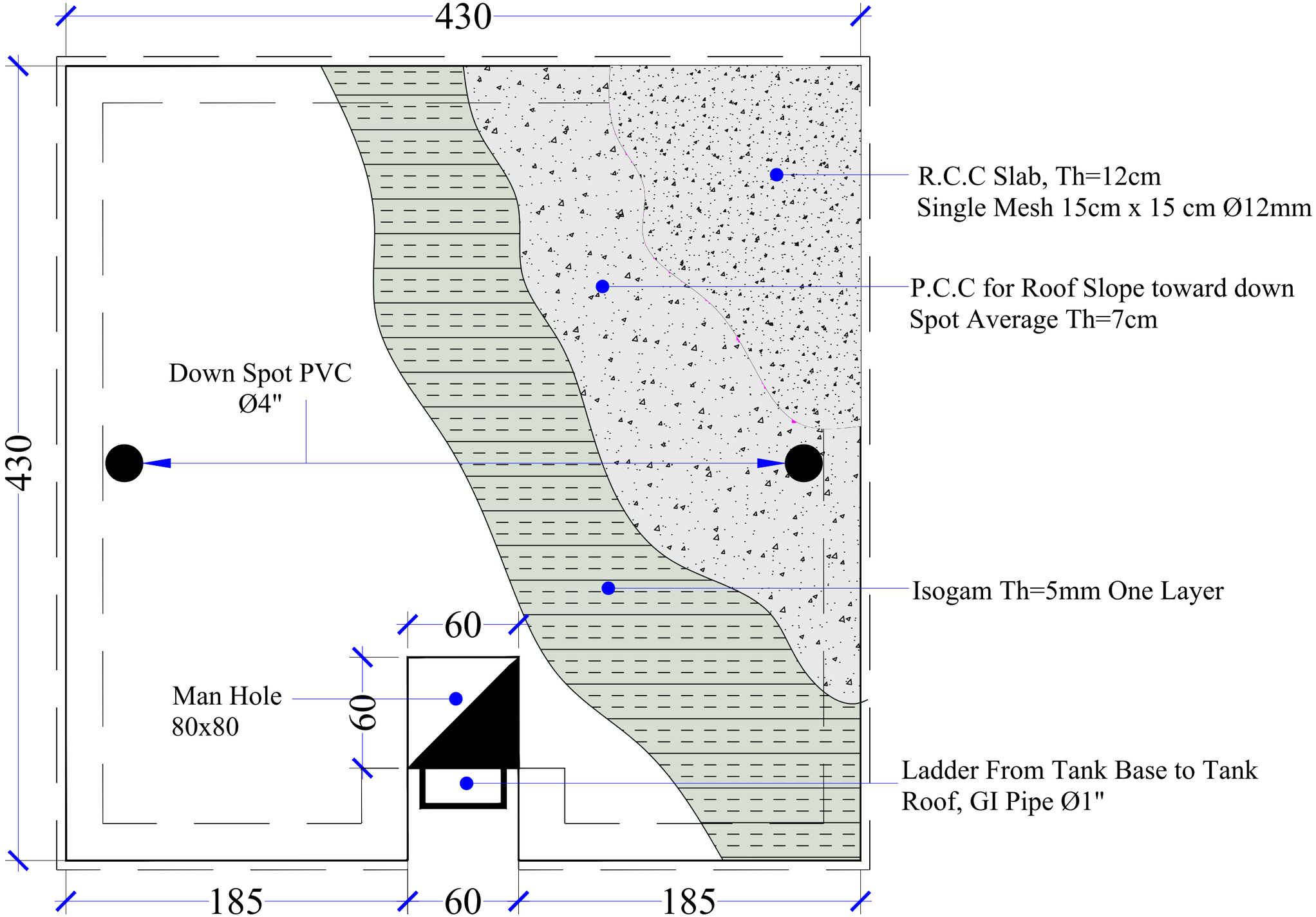

Roof Plan

Funded by:	USAID/BHA	Drafted and Design BY:	IMC/WASH Team	Province	Laghman	Date	Sep/2022	Drawing Tile	Elevated 20 M3
INTERNATIONAL MEDICAL CORPS (IMC) PROGRAM DEPARTMENT WASH UNIT		Review and Checked by:	Eng. Yousuf Mazhar	District	Mehterlam	Scale	A3-Shown	Sheet Title	Roof Plan
		Review and Approved by:	Eng. Mohammad Yasir	Village	Karanj	Unit	Centimeters	Sheet #	---------

International Medical Corps

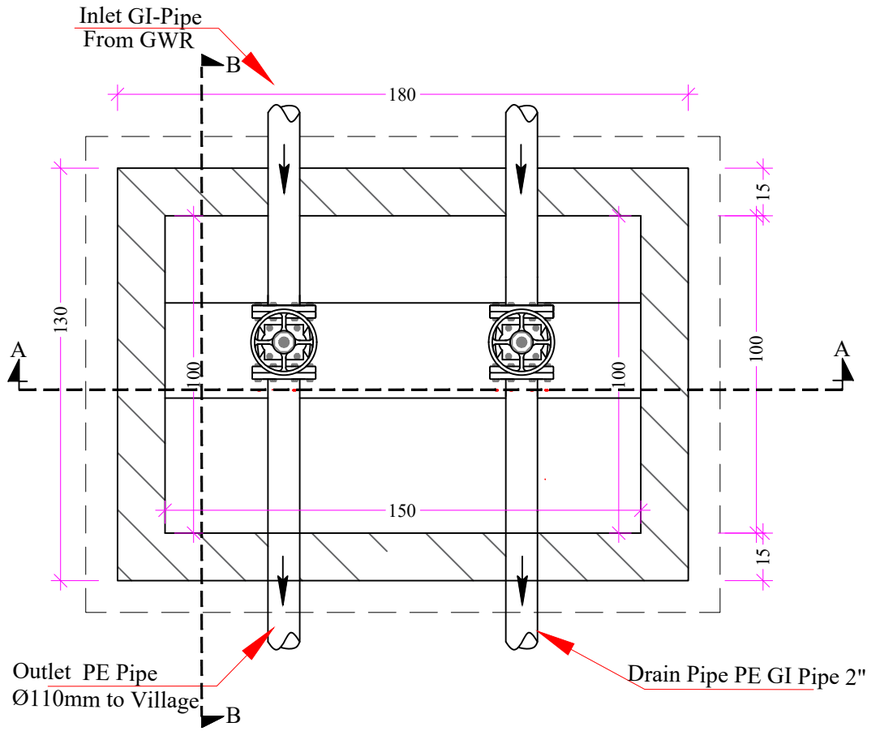

PLAN

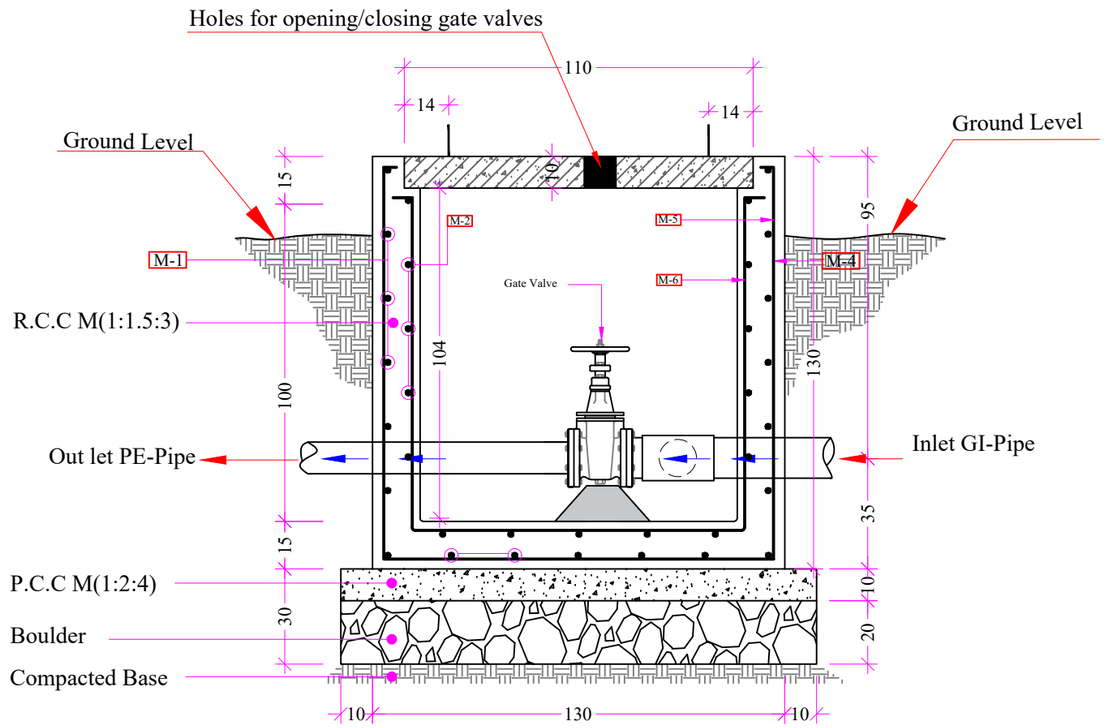

SECTION B-B

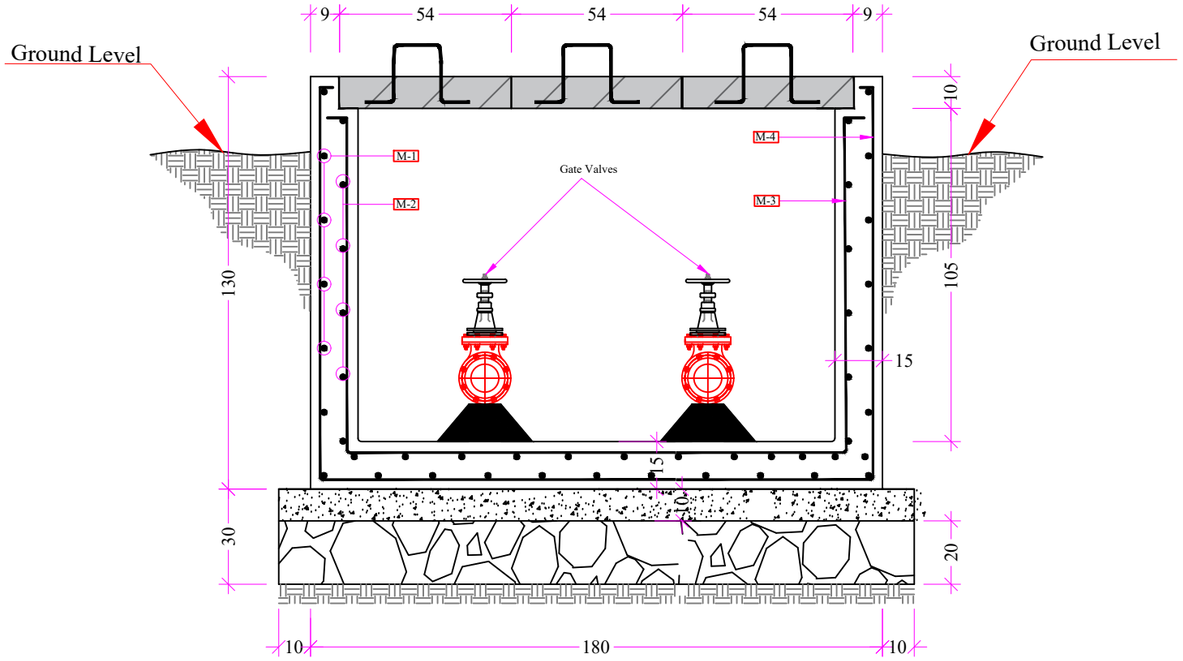

SECTION A-A

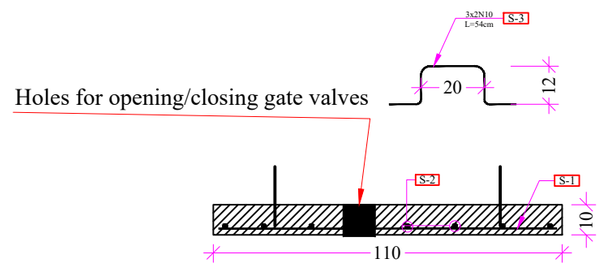

SECTION MS1-MS1

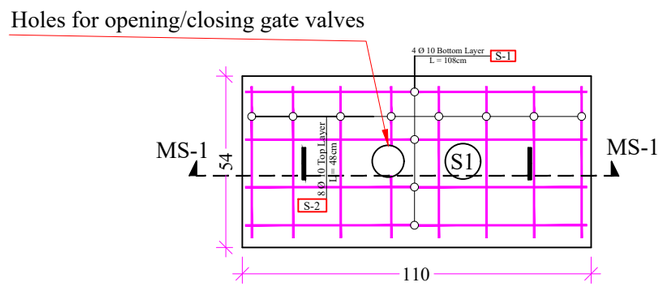

RCC SLAB PLAN

Funded by:	USAID/BHA	Drafted and Design BY:	IMC/WASH Team	Province	Laghman	Date	Sep/2022	Drawing Tile	Gate Valve
INTERNATIONAL MEDICAL CORPS (IMC) PROGRAM DEPARTMENT WASH UNIT		Review and Checked by:	Eng. Yousuf Mazhar	District	Mehterlam	Scale	A3-Shown	Sheet Title	Renfor. Plan
		Review and Approved by:	Eng. Mohammad Yasir	Village	Karanj	Unit	Centimeters	Sheet #	---------

International Medical Corps

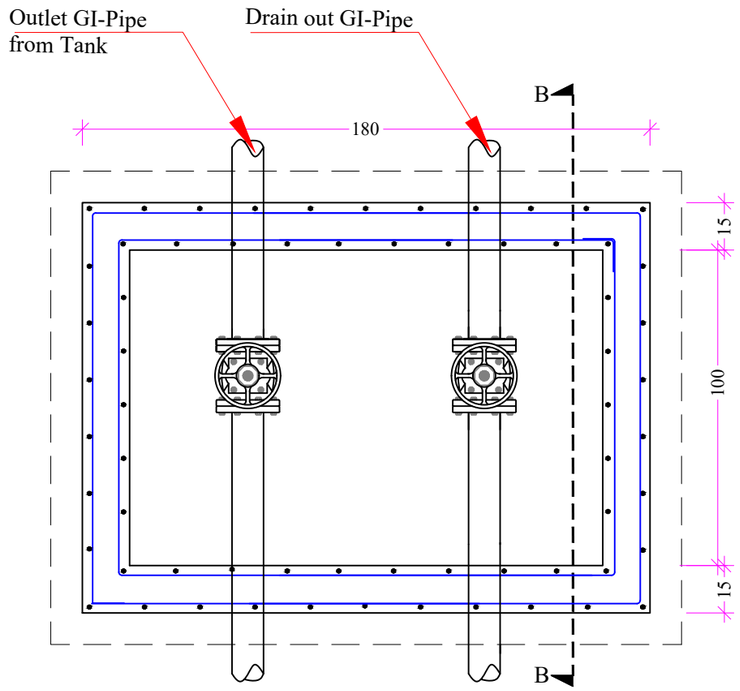

SECTIONAL PLAN OF RCC WALLS

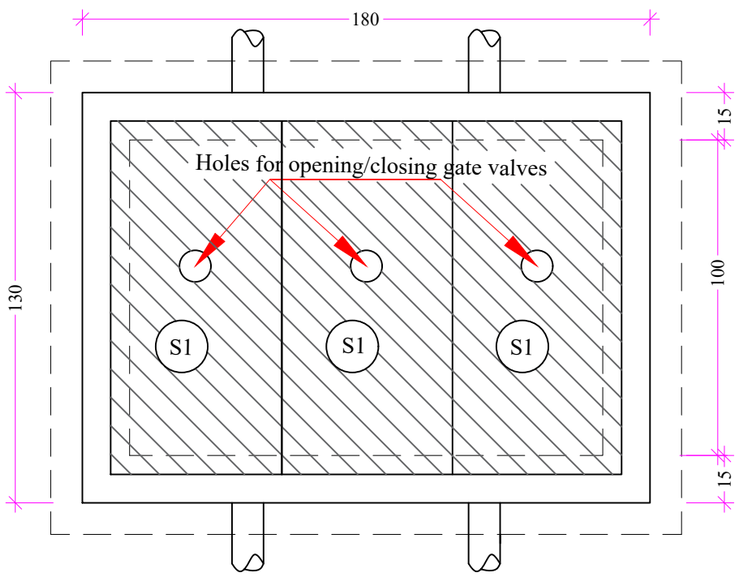

TOP VIEW

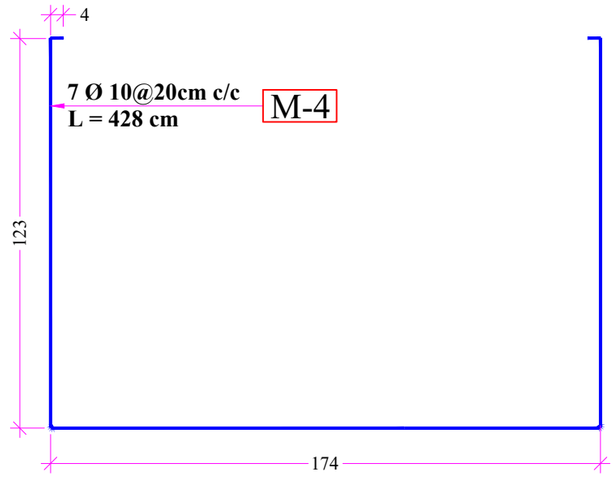

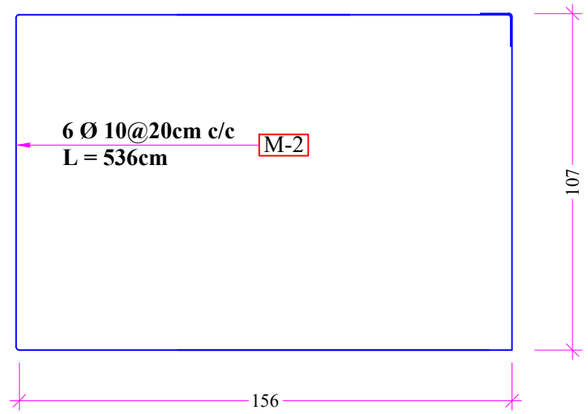

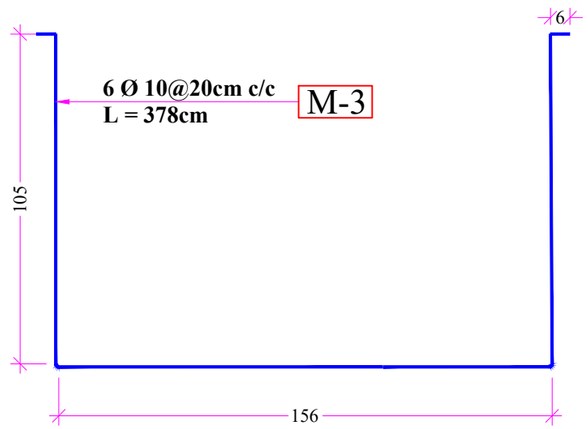

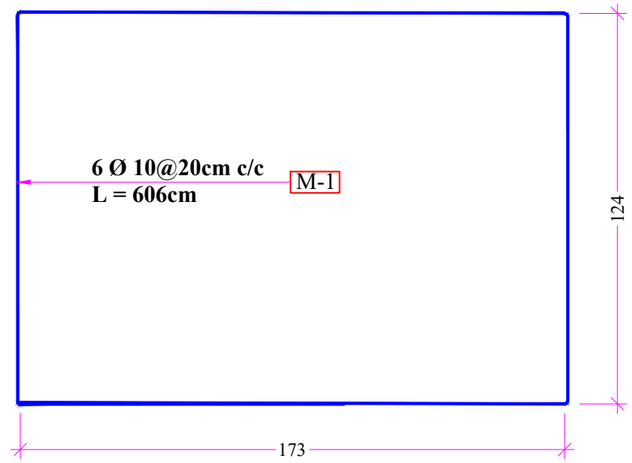

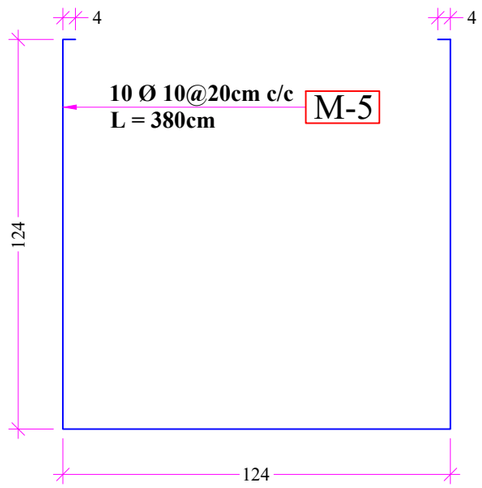

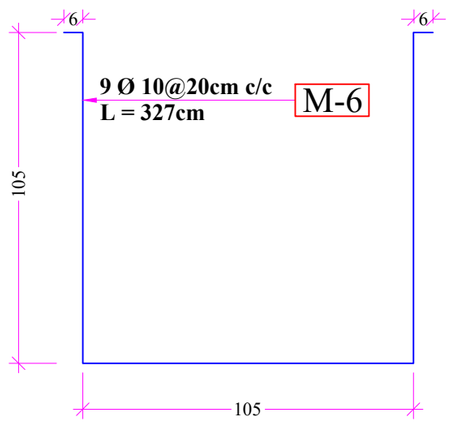

Funded by:	USAID/BHA	Drafted and Design BY:	IMC/WASH Team	Province	Laghman	Date	Sep/2022	Drawing Tile	Gate Valve
INTERNATIONAL MEDICAL CORPS (IMC) PROGRAM DEPARTMENT WASH UNIT		Review and Checked by:	Eng. Yousuf Mazhar	District	Mehterlam	Scale	A3-Shown	Sheet Title	Renfor. Plan
		Review and Approved by:	Eng. Mohammad Yasir	Village	Karanj	Unit	Centimeters	Sheet #	---------

International Medical Corps

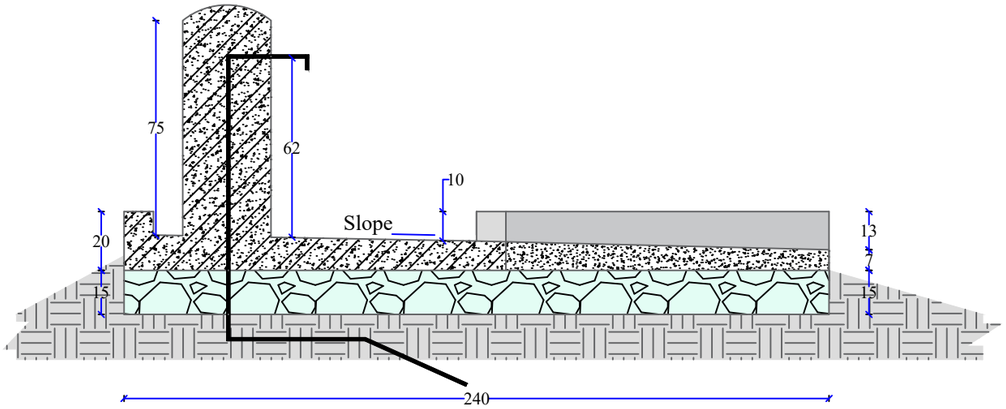

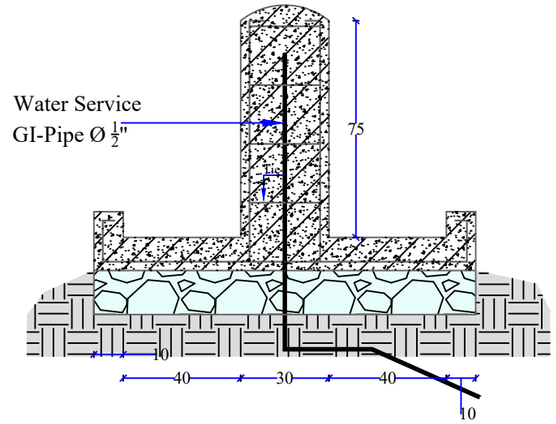

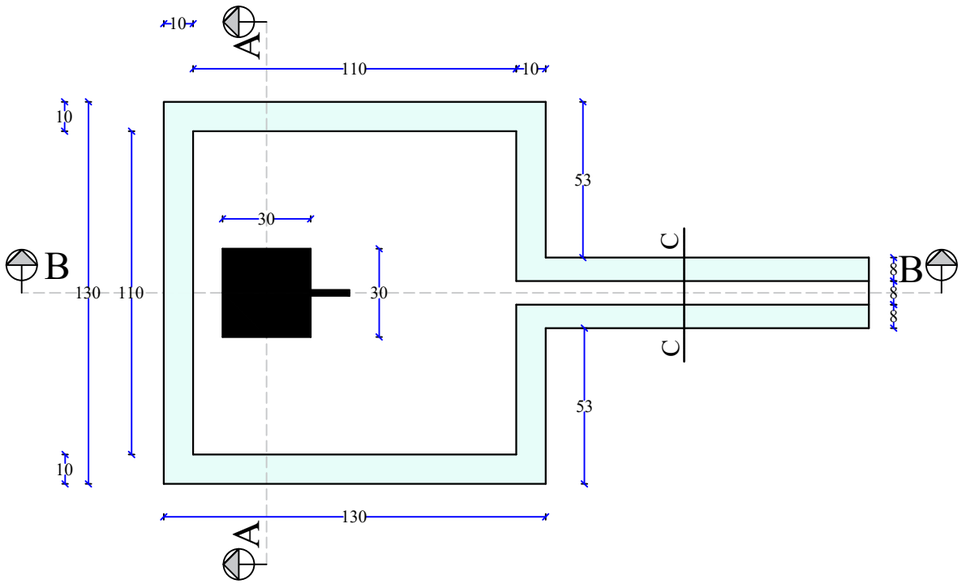

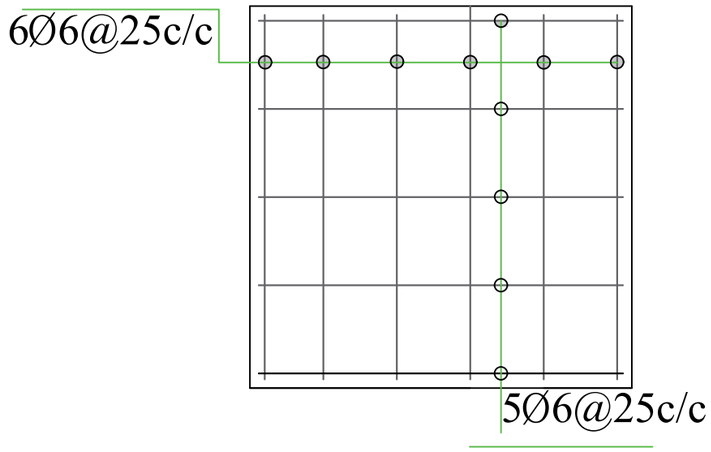

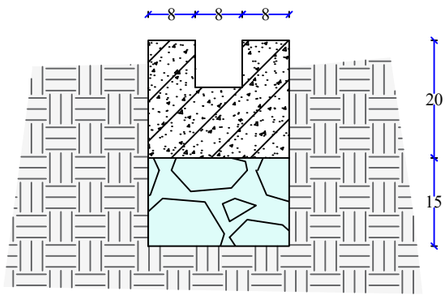

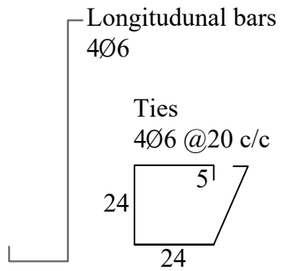

Tap Column reinfor...

Funded by:	USAID/BHA	Drafted and Design BY:	IMC/WASH Team	Province	Laghman	Date	Sep/2022	Drawing Tile	STP. Drawing
INTERNATIONAL MEDICAL CORPS (IMC) PROGRAM DEPARTMENT WASH UNIT		Review and Checked by:	Eng. Yousuf Mazhar	District	Mehterlam	Scale	A3-As shown	Sheet Title	Stand post
		Review and Approved by:	Eng. Mohammad Yasir	Village	Karanj	Unit	Centimeters	Sheet #	----------

International Medical Corps

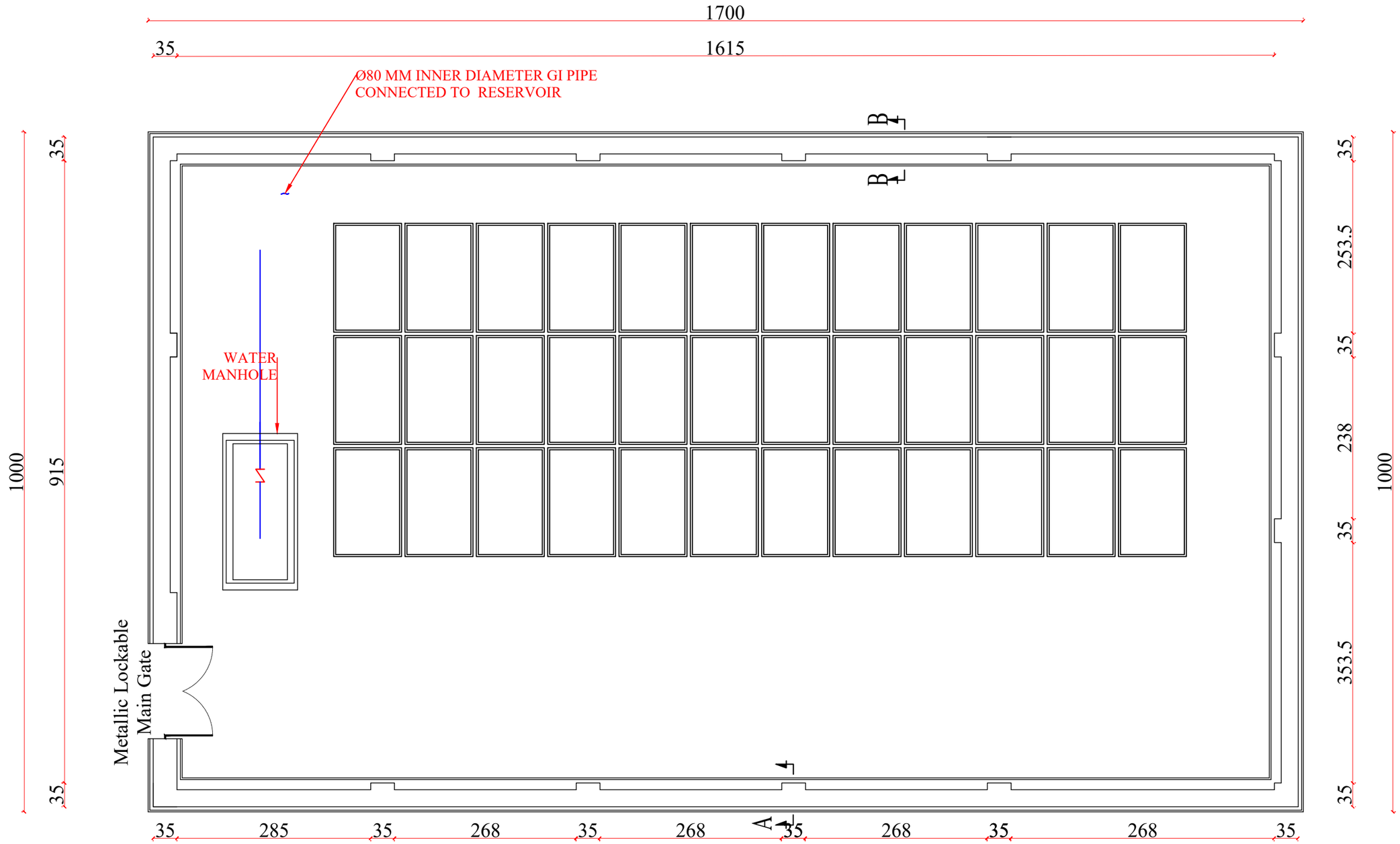

Note:
1- All dimensions are in cm unless otherwise stated.
2- During RCC work vibrator must be used to avoid.
3- All PCC works should be with M(1:2:4) mortar unless otherwise stated.
4- All RCC works should be with M(1:1.5:3) mortar unless otherwise stated.
5- Brick masonary (1:4).
6- Curing must be continued upto 28 days.
7- Clear and Clean water must be used every where.

Boundary wall

Funded by:	USAID/BHA	Drafted and Design BY:	IMC/WASH Team	Province	Laghman	Date	Sep/2022	Drawing Tile	Boundry Wall	International Medical Corps
INTERNATIONAL MEDICAL CORPS (IMC) PROGRAM DEPARTMENT WASH UNIT		Review and Checked by:	Eng. Yousuf Mazhar	District	Mehterlam	Scale	A3-Shown	Sheet Title	Boundry Wall Plan	
		Review and Approved by:	Eng. Mohammad Yasir	Village	Karanj	Unit	Centimeters	Sheet #	----------	

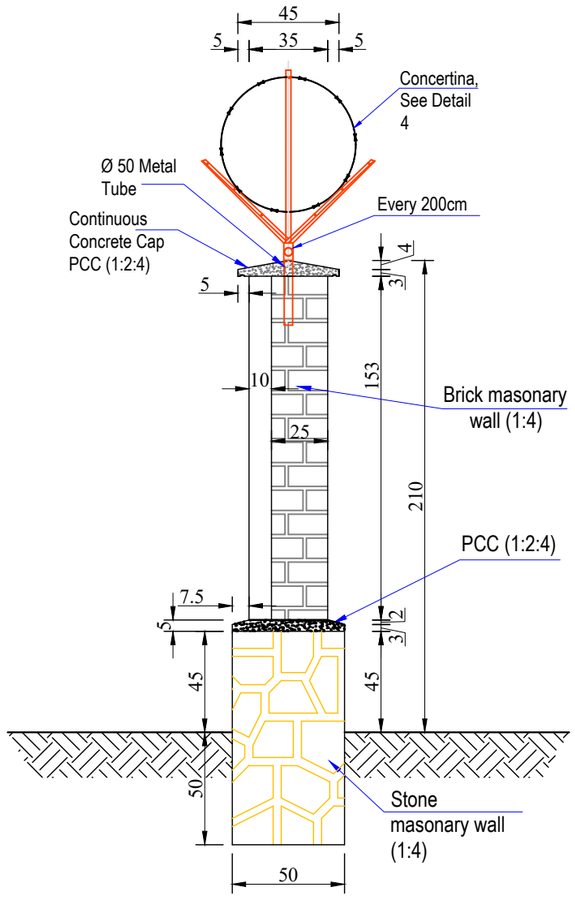

Section B-B

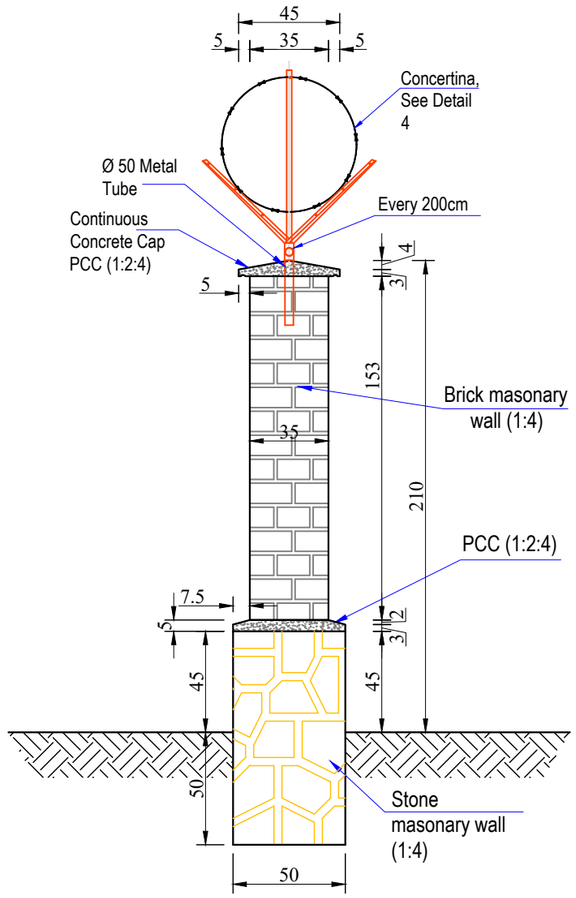

Section A-A

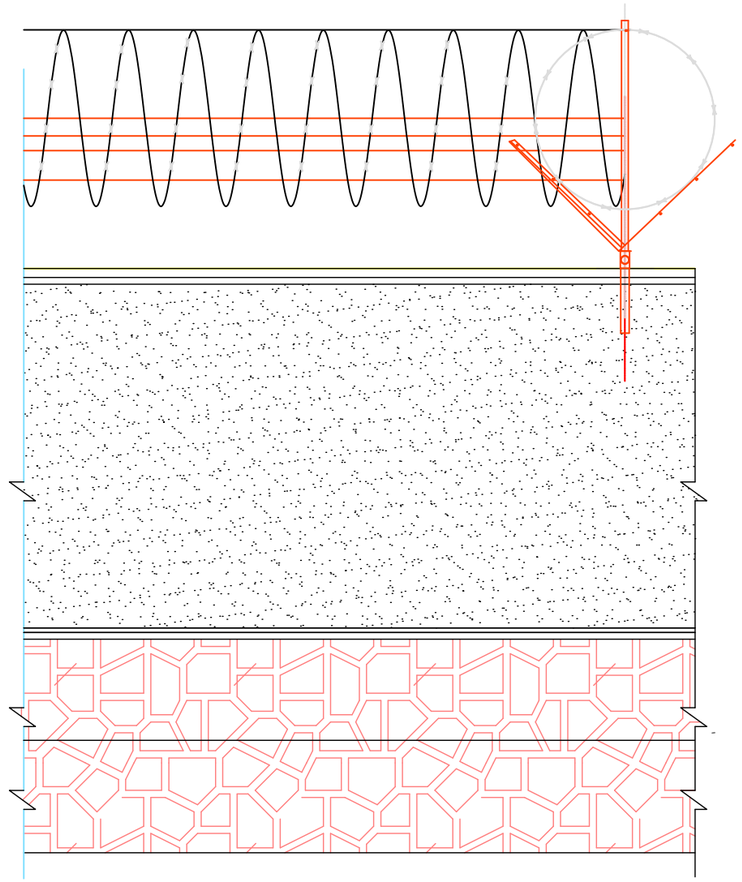

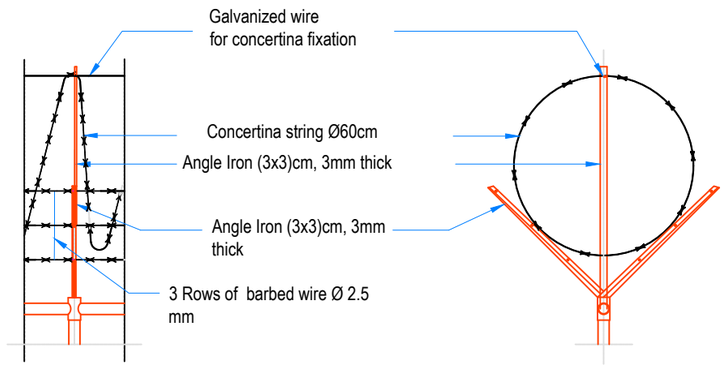

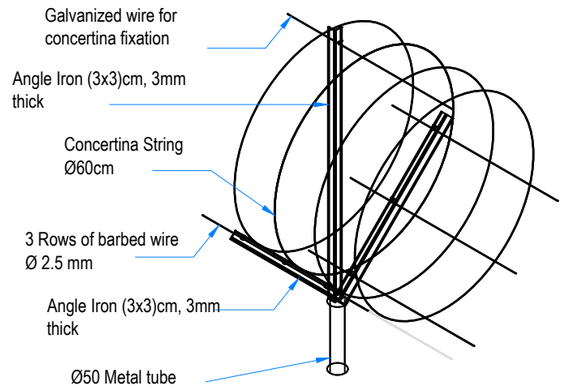

Isometric Concertina Detail

Funded by:	USAID/BHA	Drafted and Design BY:	IMC/WASH Team	Province	Laghman	Date	Sep/2022	Drawing Tile	Boundry Wall
INTERNATIONAL MEDICAL CORPS (IMC) PROGRAM DEPARTMENT WASH UNIT		Review and Checked by:	Eng. Yousuf Mazhar	District	Mehterlam	Scale	A3-Shown	Sheet Title	Front View+Section
		Review and Approved by:	Eng. Mohammad Yasir	Village	Karanj	Unit	Centimeters	Sheet #	----------

International Medical Corps

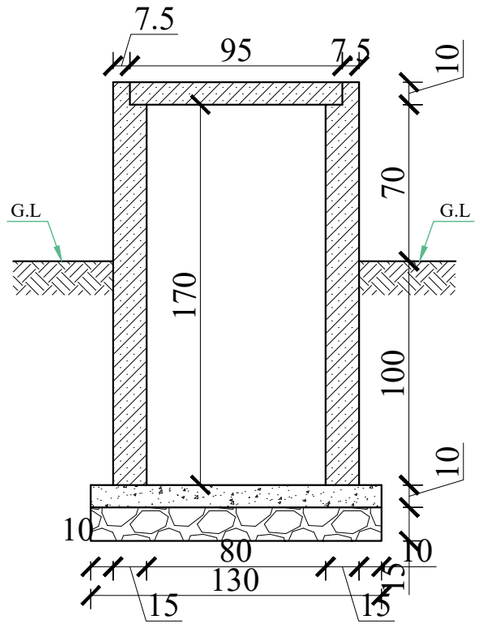

Section A-A

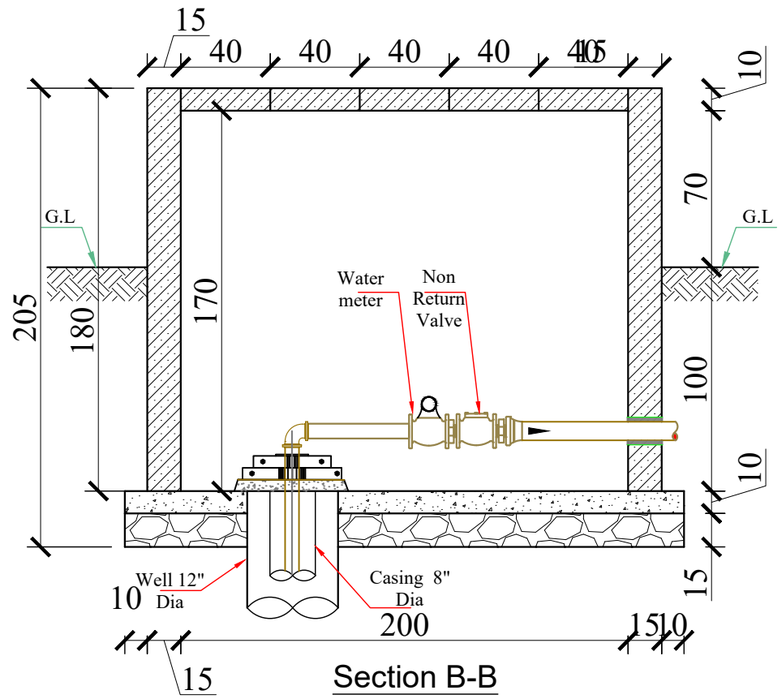

Section B-B

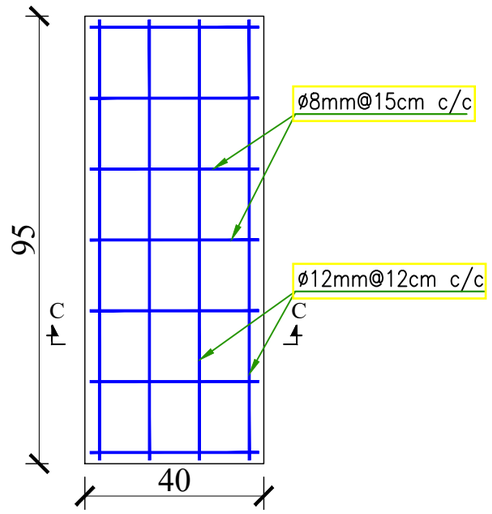

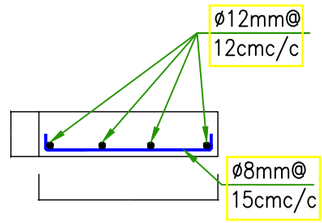

Section C - C

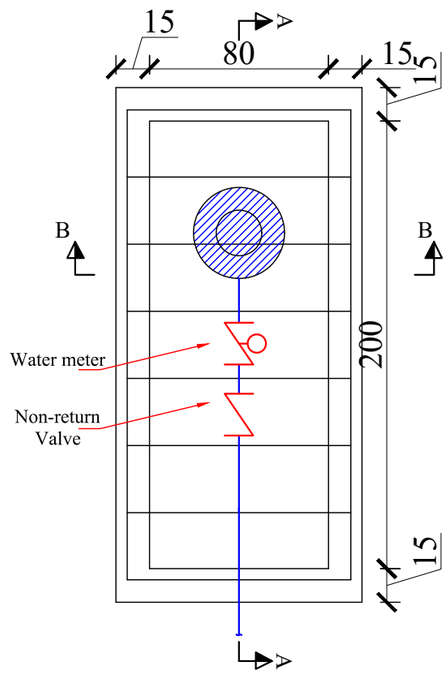

Well Protection Plan

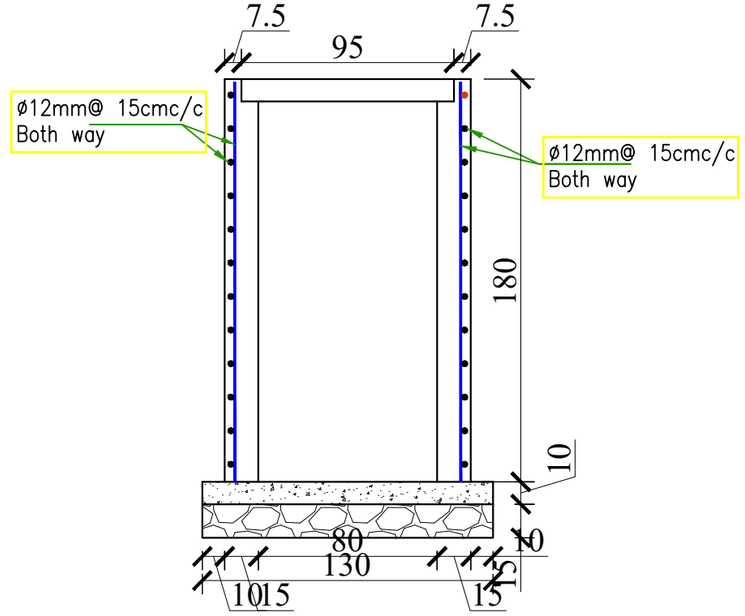

Wall Reinforcement

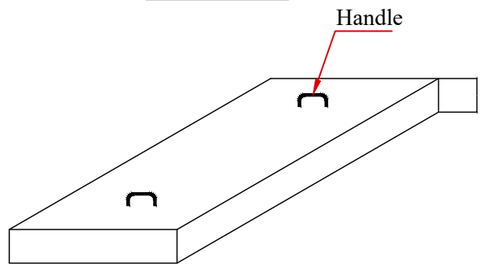

RCC Slab

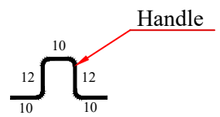

Handle

Funded by:	USAID/BHA	Drafted and Design BY:	IMC/WASH Team	Province	Laghman	Date	Sep/2022	Drawing Tile	Well Development
INTERNATIONAL MEDICAL CORPS (IMC) PROGRAM DEPARTMENT WASH UNIT		Review and Checked by:	Eng. Yousuf Mazhar	District	Mehterlam	Scale	A3-Shown	Sheet Title	Sections and details
		Review and Approved by:	Eng. Mohammad Yasir	Village	Karanj	Unit	Centimeters	Sheet #	----------

International Medical Corps

Note:

1-RCC Concrete Footing and Column M(1:1.5:3).
2-J-Anchor Bolt 16mm.
3-Deformed Grade 60 steel bar Dia.10mm according to drawing.
4-Steel angle iron (2"x2"x4mm).
5-Steel girder mini. sizing (10cmx4.5cmx8mm).
PCC M(1:2:4).
Foundation Compacted 95%.
Potable water used.

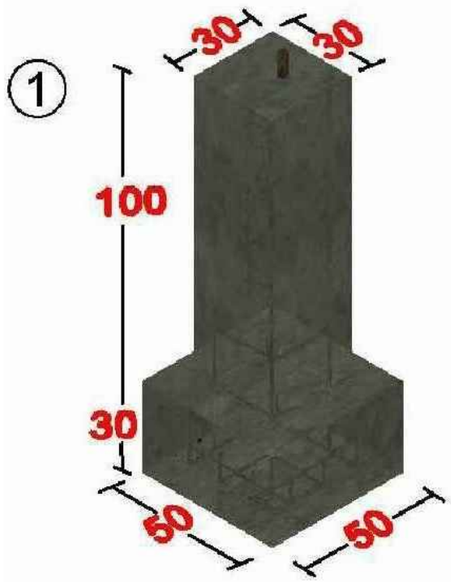

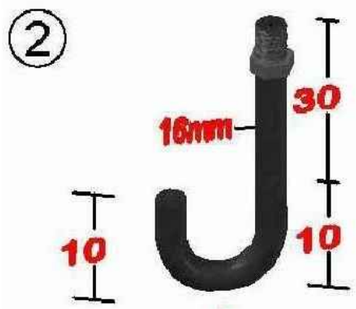

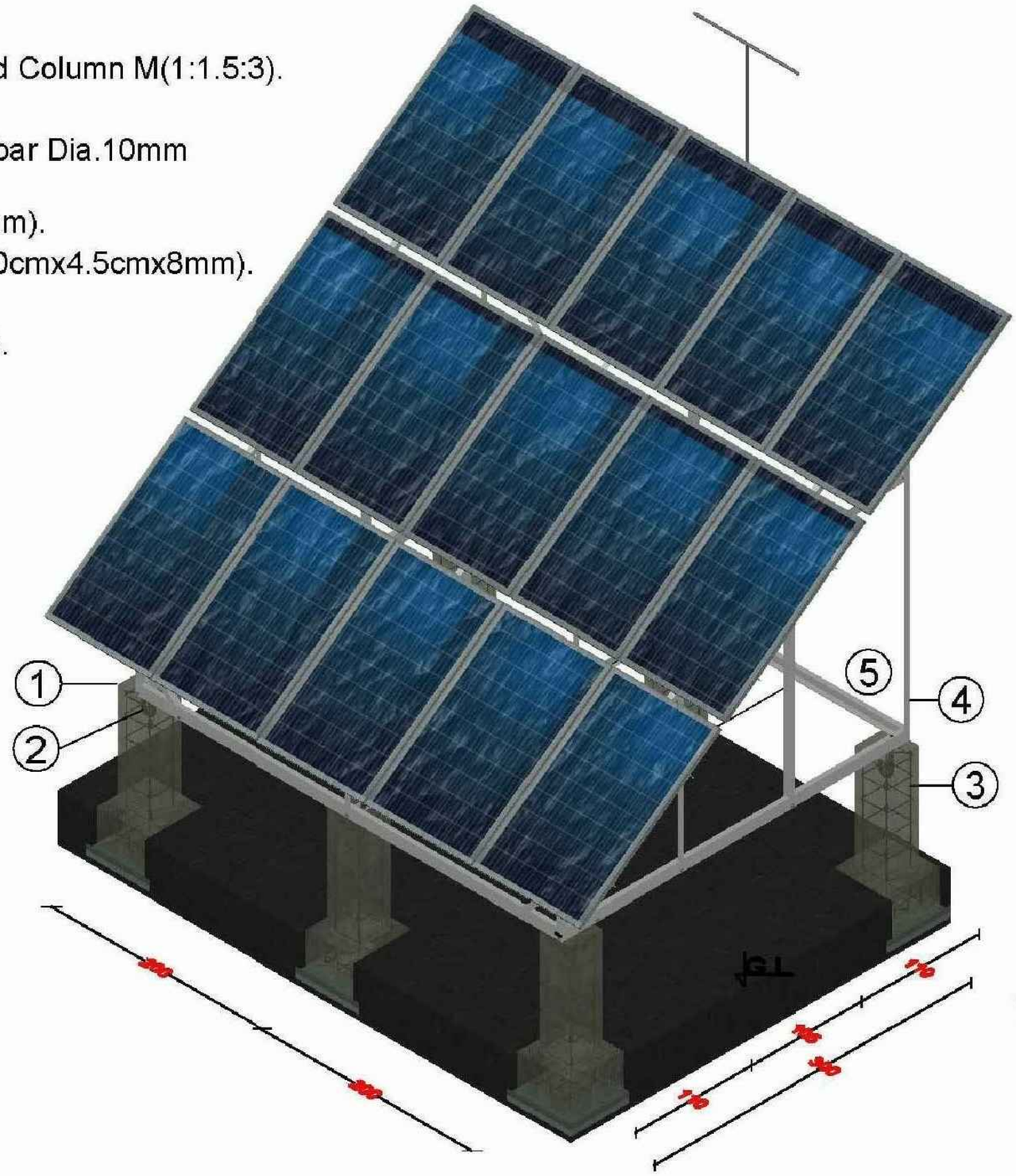

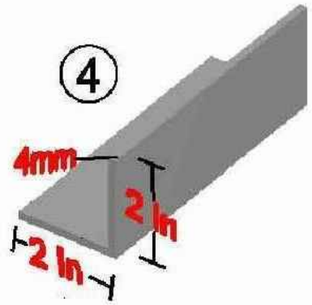

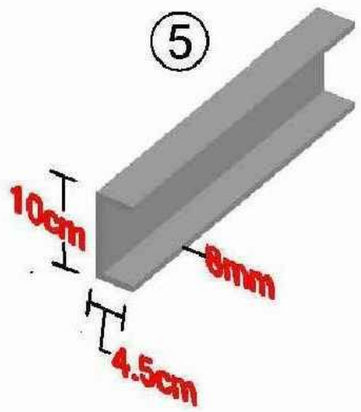

Funded by:	USAID/BHA	Drafted and Design BY:	IMC/WASH Team	Province	Laghman	Date	Sep/2022	Drawing Tile	Solar Frame	International Medical Corps	
INTERNATIONAL MEDICAL CORPS (IMC) PROGRAM DEPARTMENT WASH UNIT		Review and Checked by:	Eng. Yousuf Mazhar	District	Mehterlam	Scale	A3-Shown	Sheet Title	Frame 3 D		
		Review and Approved by:	Eng. Mohammad Yasir	Village	Karanj	Unit	Centimeters	Sheet #	-----		

A1

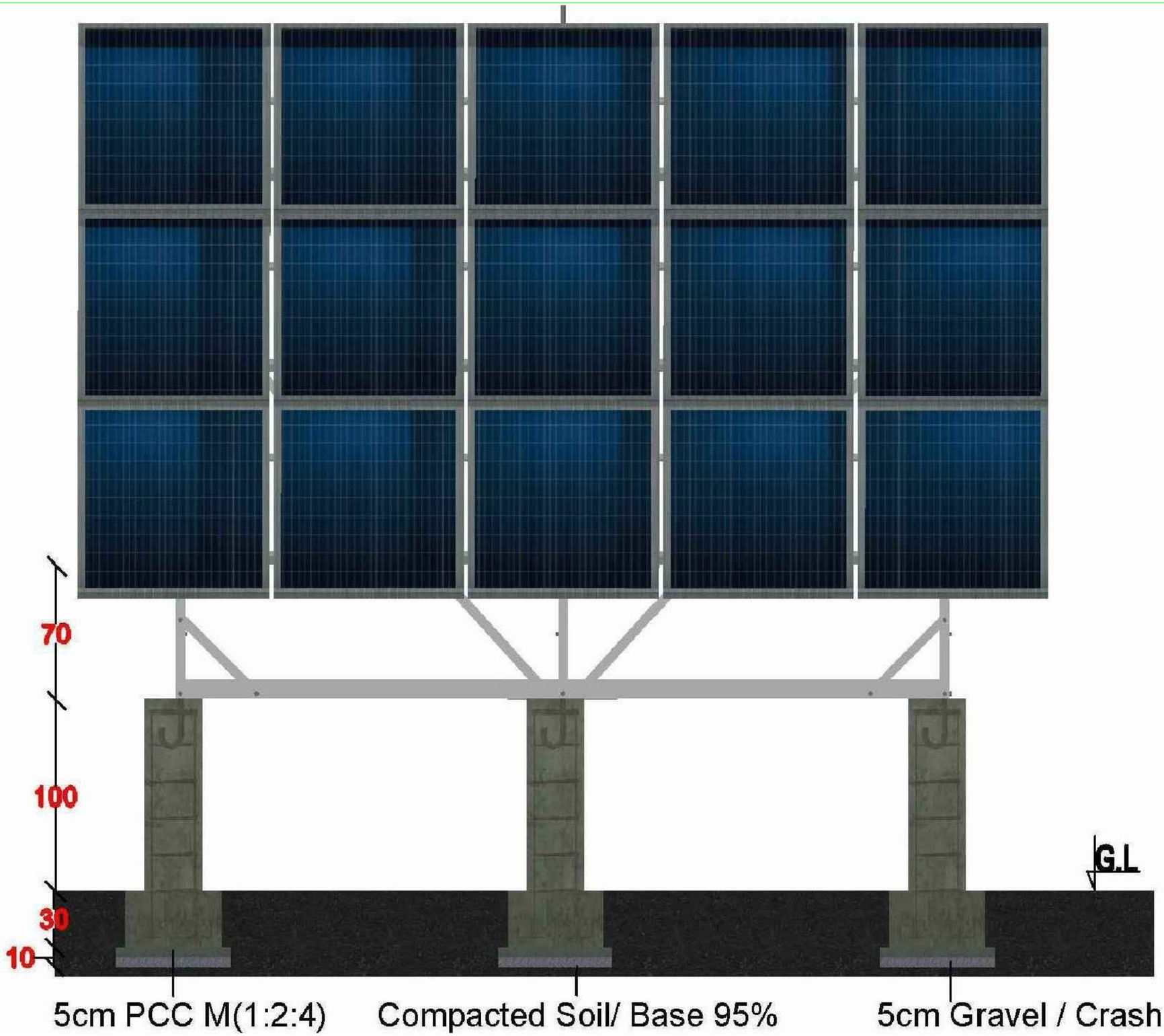

Funded by:	USAID/BHA	Drafted and Design BY:	IMC/WASH Team	Province	Laghman	Date	Sep/2022	Drawing Tile	Solar Frame	International Medical Corps	
INTERNATIONAL MEDICAL CORPS (IMC) PROGRAM DEPARTMENT WASH UNIT		Review and Checked by:	Eng. Yousuf Mazhar	District	Mehterlam	Scale	A3-Shown	Sheet Title	Fron View		
		Review and Approved by:	Eng. Mohammad Yasir	Village	Karanj	Unit	Centimeters	Sheet #	----------		

Angle Θ = According to bidder solar system design

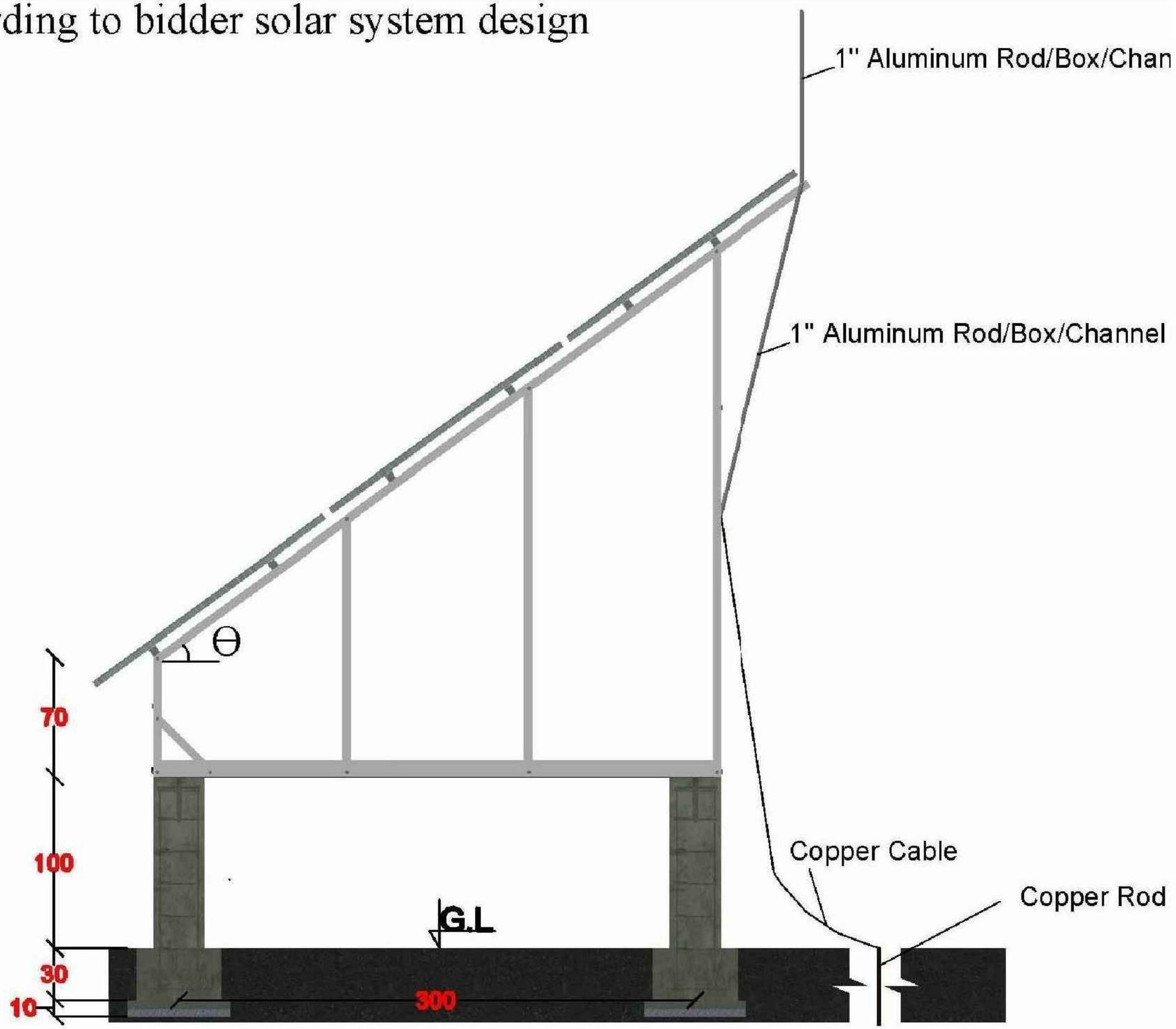

Funded by:	USAID/BHA	Drafted and Design BY:	IMC/WASH Team	Province	Laghman	Date	Sep/2022	Drawing Tile	Solar Frame
INTERNATIONAL MEDICAL CORPS (IMC) PROGRAM DEPARTMENT WASH UNIT		Review and Checked by:	Eng. Yousuf Mazhar	District	Mehterlam	Scale	A3-Shown	Sheet Title	Side View
		Review and Approved by:	Eng. Mohammad Yasir	Village	Karanj	Unit	Centimeters	Sheet #	----------

International Medical Corps

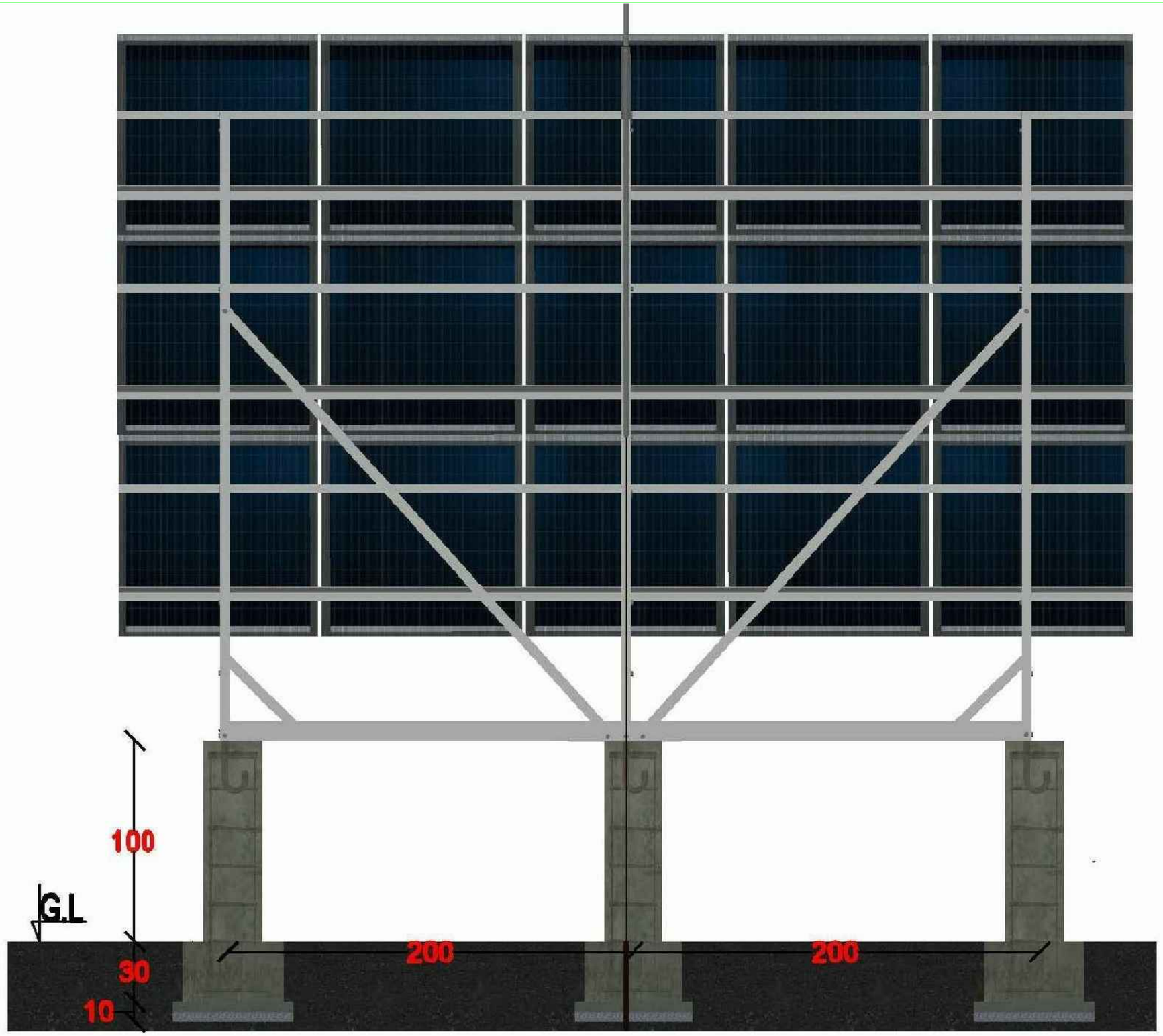

Funded by:	USAID/BHA	Drafted and Design BY:	IMC/WASH Team	Province	Laghman	Date	Sep/2022	Drawing Tile	Solar Frame
INTERNATIONAL MEDICAL CORPS (IMC) PROGRAM DEPARTMENT WASH UNIT		Review and Checked by:	Eng. Yousuf Mazhar	District	Mehterlam	Scale	A3-Shown	Sheet Title	Back View
		Review and Approved by:	Eng. Mohammad Yasir	Village	Karanj	Unit	Centimeters	Sheet #	----------

International Medical Corps