Design and Estimation of Water Supply Project

Project Name: ***Water supply solar pump system***

Village: **Bolan**
District: **Lashkargah**
Province: **Helmand**

Contents:

➢ *Project Location*	*1*	*Sheet*
➢ *Site Plan*	*2*	*Sheet*
➢ *Pump House location*	*3*	*Sheet*
➢ *Network length*	*4*	*Sheet*
➢ *Survey Data*	*5*	*Sheet*
➢ *TEE Plan*	*6*	*Sheet*
➢ *Manholes &Valve box*	*7*	*Sheets*
➢ *Pipe Section*	*9*	*Sheet*
➢ *Network Pressure*	*10*	*Sheet*
➢ *Network Pipe diameter*	*11*	*Sheet*
➢ *Network Velocity*	*12*	*Sheet*
➢ *Reservoir Design*	*14*	*Sheets*
➢ *Solar Panels Frame*	*14*	*Sheets*

Brief Information

- ✓ No. of Family : 480
- ✓ Type of ground: 1,2
- ✓ No. Of House connection= 480
- ✓ No. of Solar panels= 171 PCS
- ✓ Length of network= 17884 m
- ✓ Total working days = 208 Days

Prepared By: Eng. G. Mohauiddin “Adil”

Project #	00-0000-0000-00
Province	Helmand
District	Lashkargah
Guzar	Bolan
Donar	**UNHCR**
Project Name	Construction of Water Supply Network

Water Supply Network

Water Supply Network Design

Surveyed Items

Current Populatio	Design Populatior	Population Grouth Factor(r%)	Design Perioud (n)	Well Depth(m)	LPCD	Each well discharge (lit/sec)
3360	4300	2.5 precent	10 year	**200**	**70**	**4.64**

Calculated Items

Designed Population	Required discharge (lit/day)	Required discharge (m3/day)	Required discharge (lit/sec)	working hours	Total Rservoir Capacity /C.um	Total House conection
4300	300000	300	13.92 from three wells	6	120	480

Sub Project Summery-1

Project ID#:	00-0000-00-00
Province	Helmand
District	Lashkargah
Project	Construction of Water supply Network

Description of expected outputs:	Number	Unit	Quantity	Total	Budget	Remark
Water Network Pipe Line.	1	m	**17884**	**17884**		
Three Deep wells	3	m	200	**600**		
New construction of two water elevator tanks(60 cu.m)	2	cum	60	**120**		
Solar System	1	LS	1	**1**		
New construction of Boundary Wall L=120M, H = 3 m	1	m	120	**120**		
New construction of 2 Pcs Toilets	1	door	2	**2**		
New Construction of Septic Tank			1	**1**		
New Construction of Guard Room			1	**1**		
New construction of Power Room			1	**1**		
Construction of Green Area	1	LS	1	**1**		
Total Project Cost						

Point 3
Point 1
Point 4
Resrvoir
Image © 2022 Maxar Technologies
Google Earth
41 R 625441.24 m E 3492899.15 m N elev 785 m eye alt 1.89 km

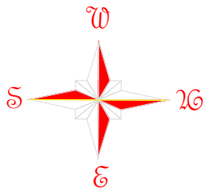

Legends

No	Name	Symbol
1	Residential Area	
2	Pump House	
3	Boundry Wall	
4	street	
5	Street Number	23

Pump House GPS Coordinates Observation:

P = 31°33' 55"N 64° 19' 16 "E

Elev= 782m

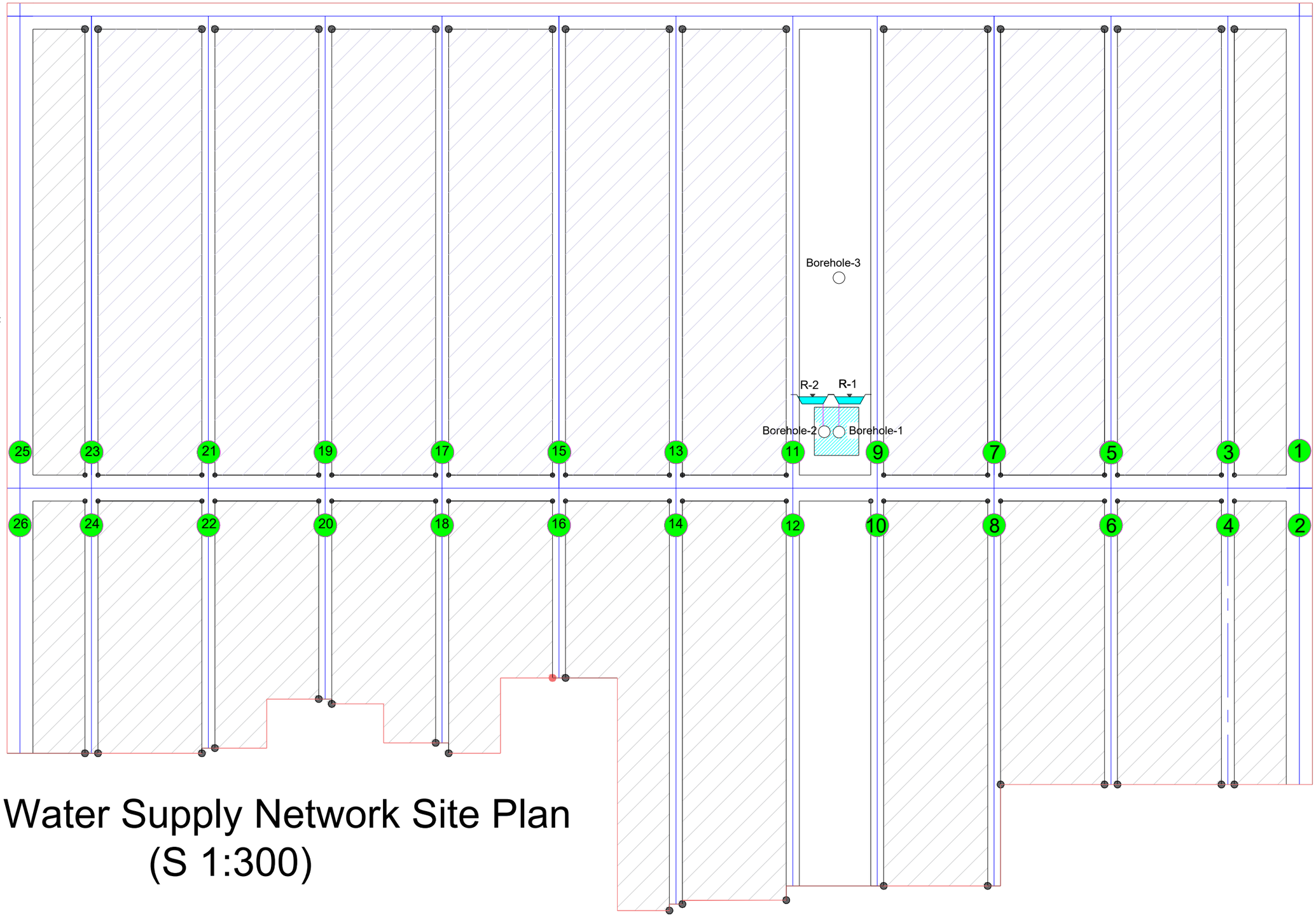

Bolan Water Supply Network Site Plan
(S 1:300)

UNHCR | Afghanistan

زنان برای زنان افغان
WOMEN FOR AFGHAN WOMEN

Helmand Water Supply Network-Bolan

Drawing Title	Project code	Helmand - 000 - 000	Sheet #		Drawn By	Designed By	Checked By
General site Plan	Project Name	Water Supply Network	1	Name	Eng Mohauiddin	Eng Mohauiddin	
	Project Location	Lashkargah City, Helmand Province		Sign			
				Date			

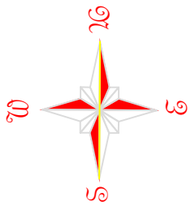

Note:

1-All dimension are in meters .
2-PCC should be (1:2:4).
3-Stone Masonry Ratio Should be (1:4).
4-Brick Masonry Ratio Should be (1:3).
5-RCC Concrete Ratio Should be (1:1,5:3).
6-All Reinforcements steel bars should not be eroded or lubricated and has to be clean.
7-All steel bars should be Class A .
8- All steel bars should be Grade 60.
9-The Curing of RCC Concrete should not be less then (28) days.

1 - Construction of Guard Room.
2 - Construction of Power Room.
3 - Construction of 2 PCs Toilets.
4 - Construction of Septic Tank.
5 - Construction of Two Water Elevate Tanks.
6 - Drilling of 200 M Three Deep Bore Wells.
7 - Construction of Walk Way and Side Walk.
8 - Construction of Green Area.
9 - Installation of 171 PCs Solar Panels.
10 - Installation of Small and Main Steel Gates

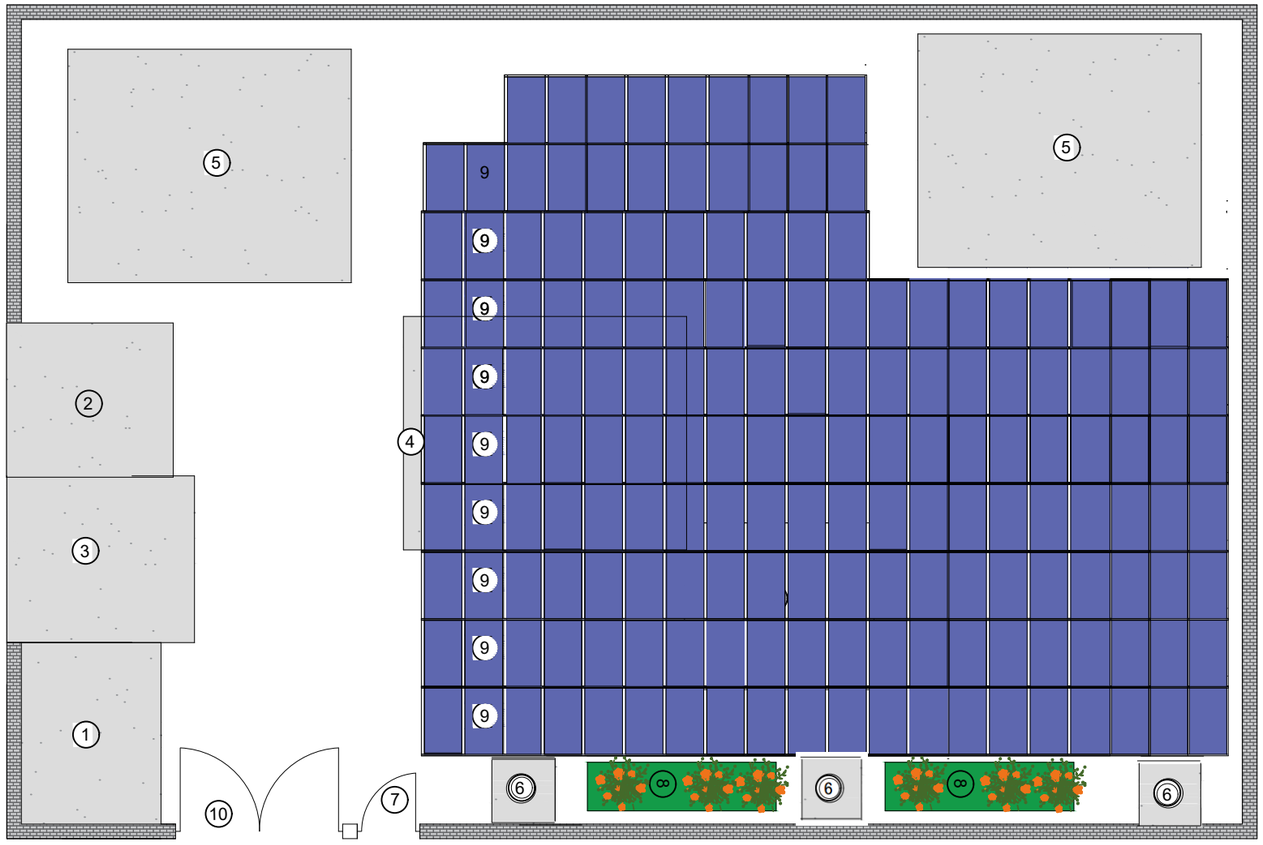

Total Covered Area = 600 Sq. m = 0.3 Jerb
Total Boundary Wall Length = 120 M

UNHCR Afghanistan	Drawing Title	Project code	Helmand - 000 - 000	Sheet #		Drawn By	Designed By	Checked By
Helmand Water Supply Network- Bolan	Power House Plan	Project Name	Water Supply Network	2	Name	Eng Amir	Eng Amir	
		Project Location	Lashkargah City, Helmand Province		Sign			
					Date			

Bolan Water Supply Network Lenght (S 1:300)

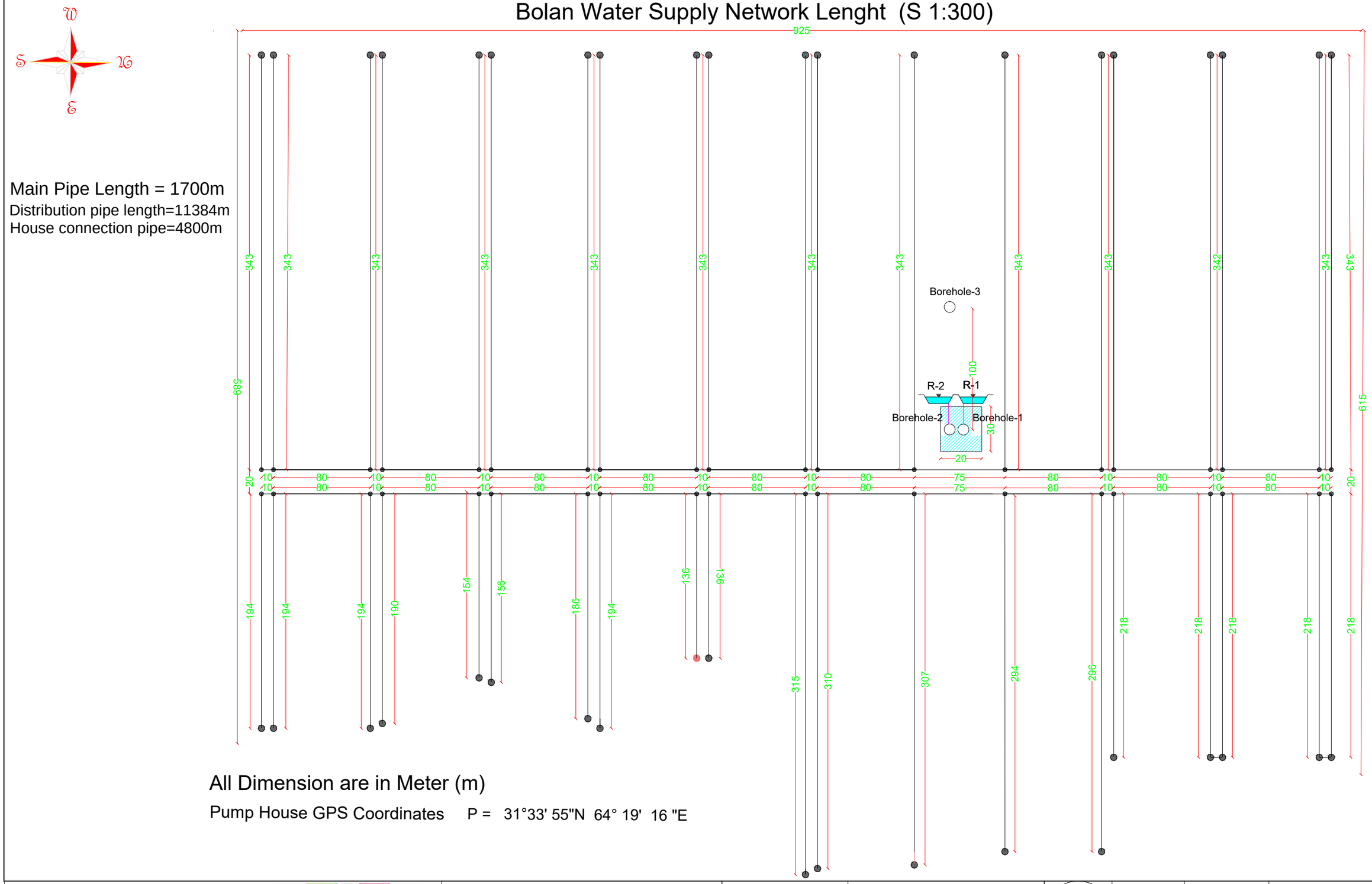

Main Pipe Length = 1700m

Distribution pipe length=11384m

House connection pipe=4800m

All Dimension are in Meter (m)

Pump House GPS Coordinates P = 31°33' 55"N 64° 19' 16 "E

UNHCR Afghanistan	Drawing Title	Project code	Helmand - 000 - 000	Sheet #		Drawn By	Designed By	Checked By
		Project Name	Water Supply Network	3	Name	Eng Mohauiddin	Eng Mohauiddin	
Helmand Water Supply Network- Bolan	Network Length	Project Location	Lashkargah City, Helmand Province		Sign			
					Date			

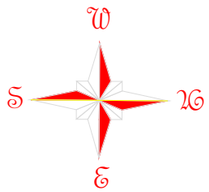

Legends

No	Name	Symbol
1	Main Pipe line 5"	
2	Main Pipe line 4"	
3	Main Pipe line 3"	
4	Sub Pipe line 1.5"	
5	House connection 0.5"	
6	Manhole (114*114)cm # 47	
7	House Connection Meter # 480	
8	Borehole 14"	
9	Power House	
10	Resevoir 60 Cu.m	R

Pump House GPS Coordinates

P = 31°33' 55"N 64° 19' 16 "E

Elev= 782m

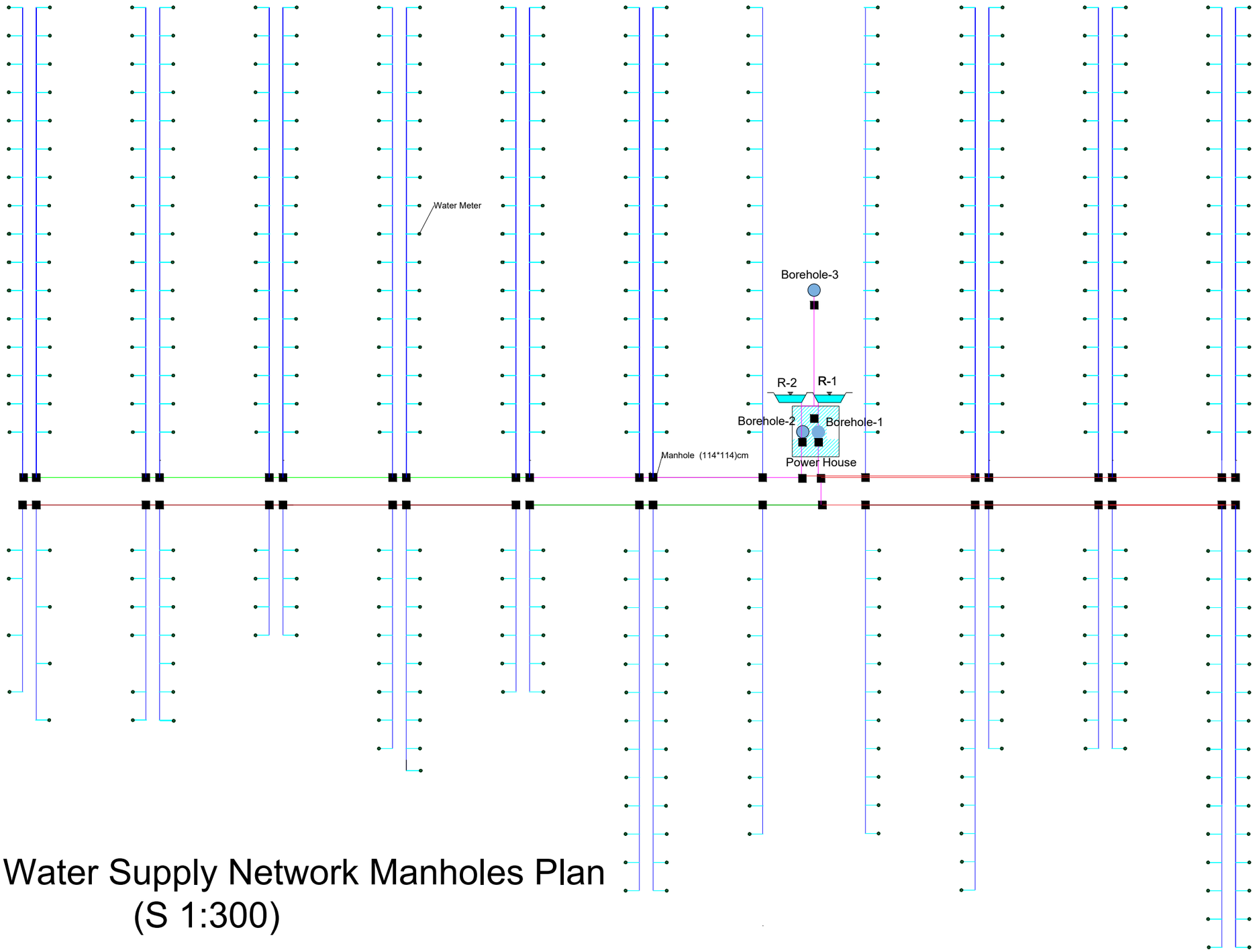

Bolan Water Supply Network Manholes Plan
(S 1:300)

UNHCR Afghanistan	Drawing Title	Project code	Helmand - 000 - 000	Sheet #		Drawn By	Designed By	Checked By
Helmand Water Supply Network- Bolan	Manholes Site Plan	Project Name	Water Supply Network	4	Name	Eng Mohauiddin	Eng Mohauiddin	
		Project Location	Lashkargah City, Helmand Province		Sign			
					Date			

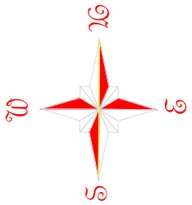

Legends

No	Name	Symbol
1	Main Pipe line 5"	
2	Main Pipe line 4"	
3	Main Pipe line 3"	
4	Sub Pipe line 1.5"	
5	House connection 0.5"	
6	TEE # 41	
7	House Connection Meter # 480	
8	Borehole 14"	
9	Power House	
10	Resevoir 60 Cu.m	R

Pump House GPS Coordinates

P = 31°33' 55"N 64° 19' 16 "E

Elev= 782m

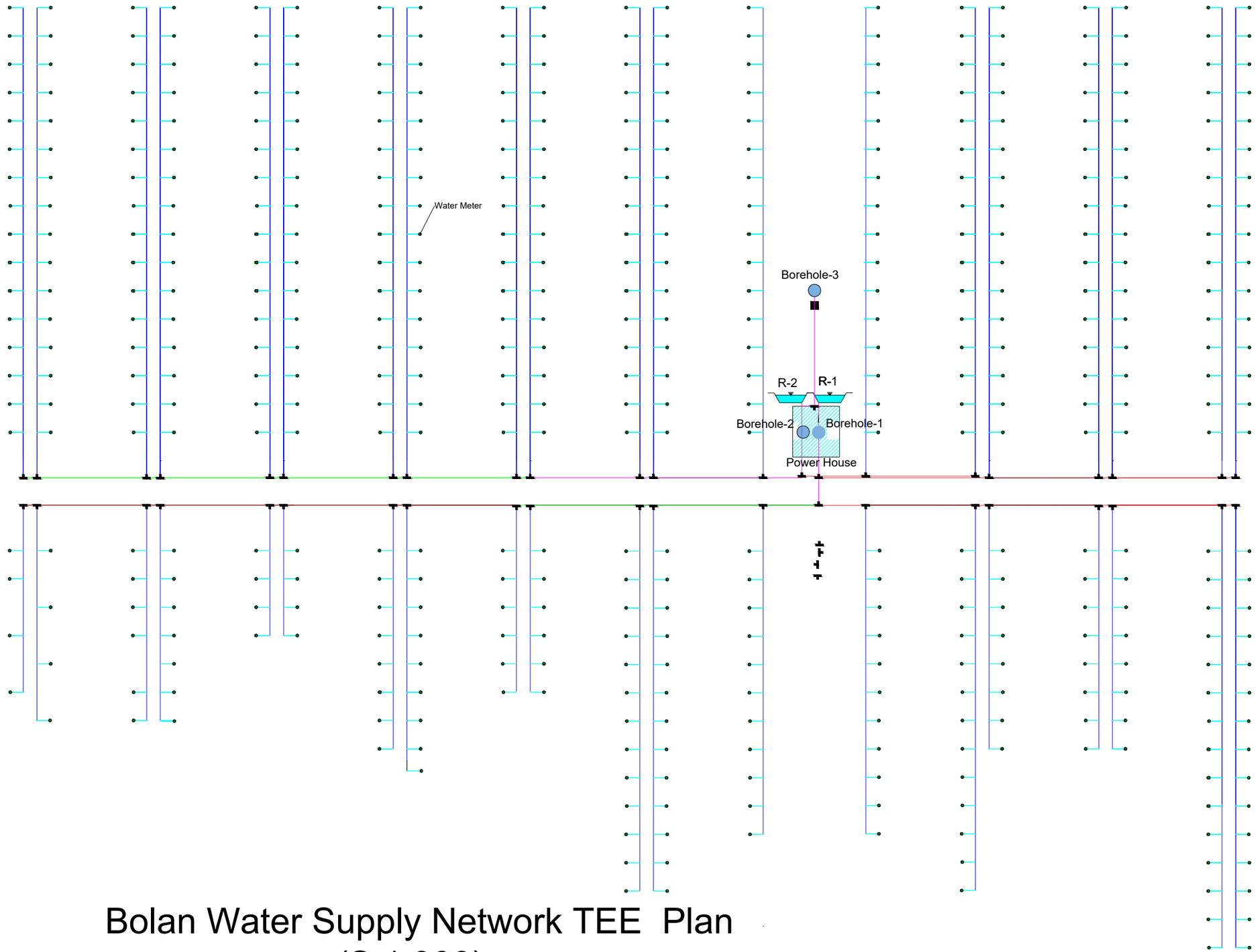

Bolan Water Supply Network TEE Plan
(S 1:300)

UNHCR Afghanistan	Drawing Title	Project code	Helmand - 000 - 000	Sheet #		Drawn By	Designed By	Checked By
Helmand Water Supply Network- Bolan	TEE Plan	Project Name	Water Supply Network	5	Name	Eng Mohauiddin	Eng Mohauiddin	
		Project Location	Lashkargah City, Helmand Province		Sign			
					Date			

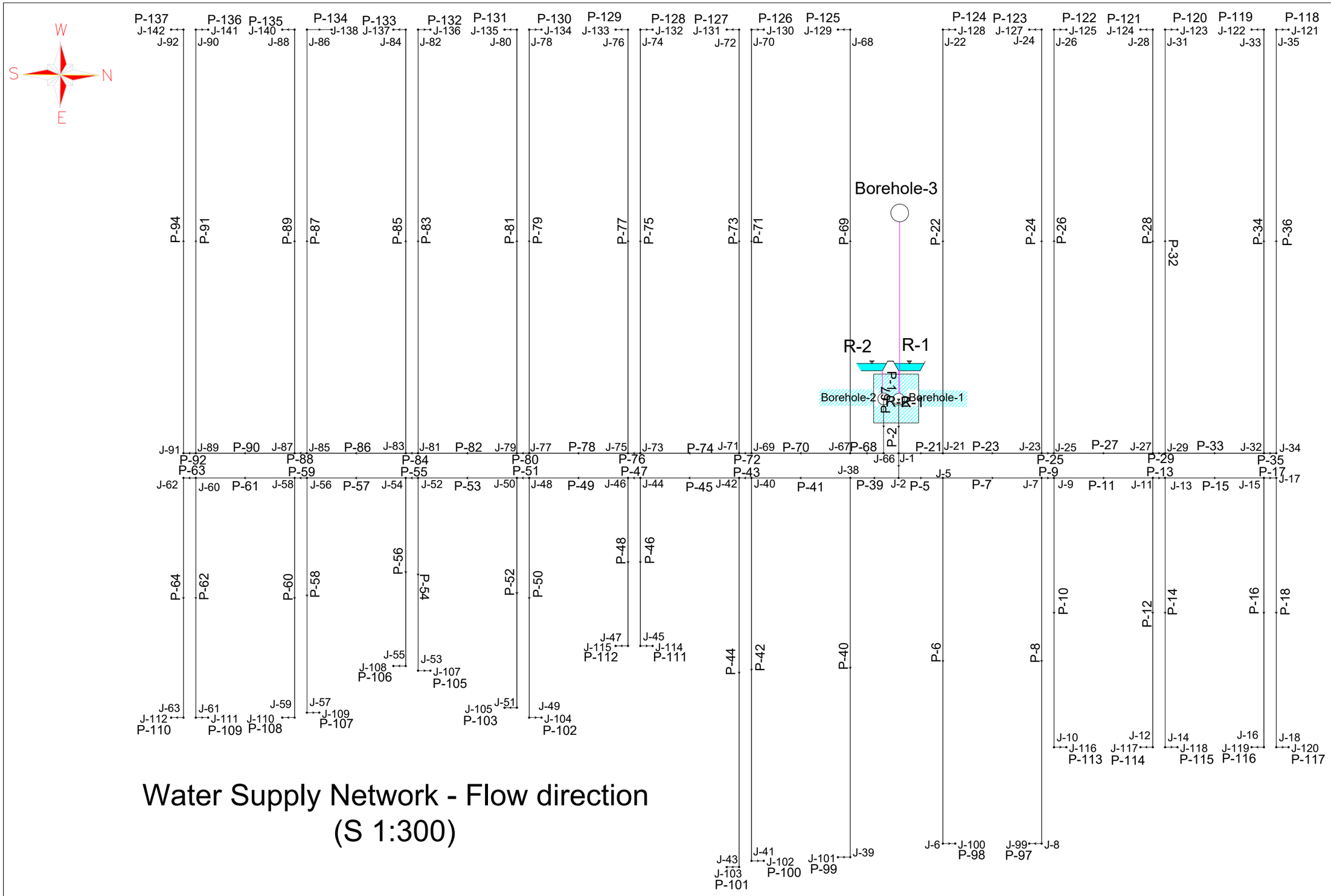

Water Supply Network - Flow direction
(S 1:300)

UNHCR Afghanistan	Drawing Title	Project code	Helmand - 000 - 000	Sheet #		Drawn By	Designed By	Checked By
Helmand Water Supply Network- Bolan	Network Flow Direction	Project Name	Water Supply Network	6	Name	Mohauiddin	Mohauiddin	
		Project Location	Lashkargah City, Helmand Province		Sign			
					Date			

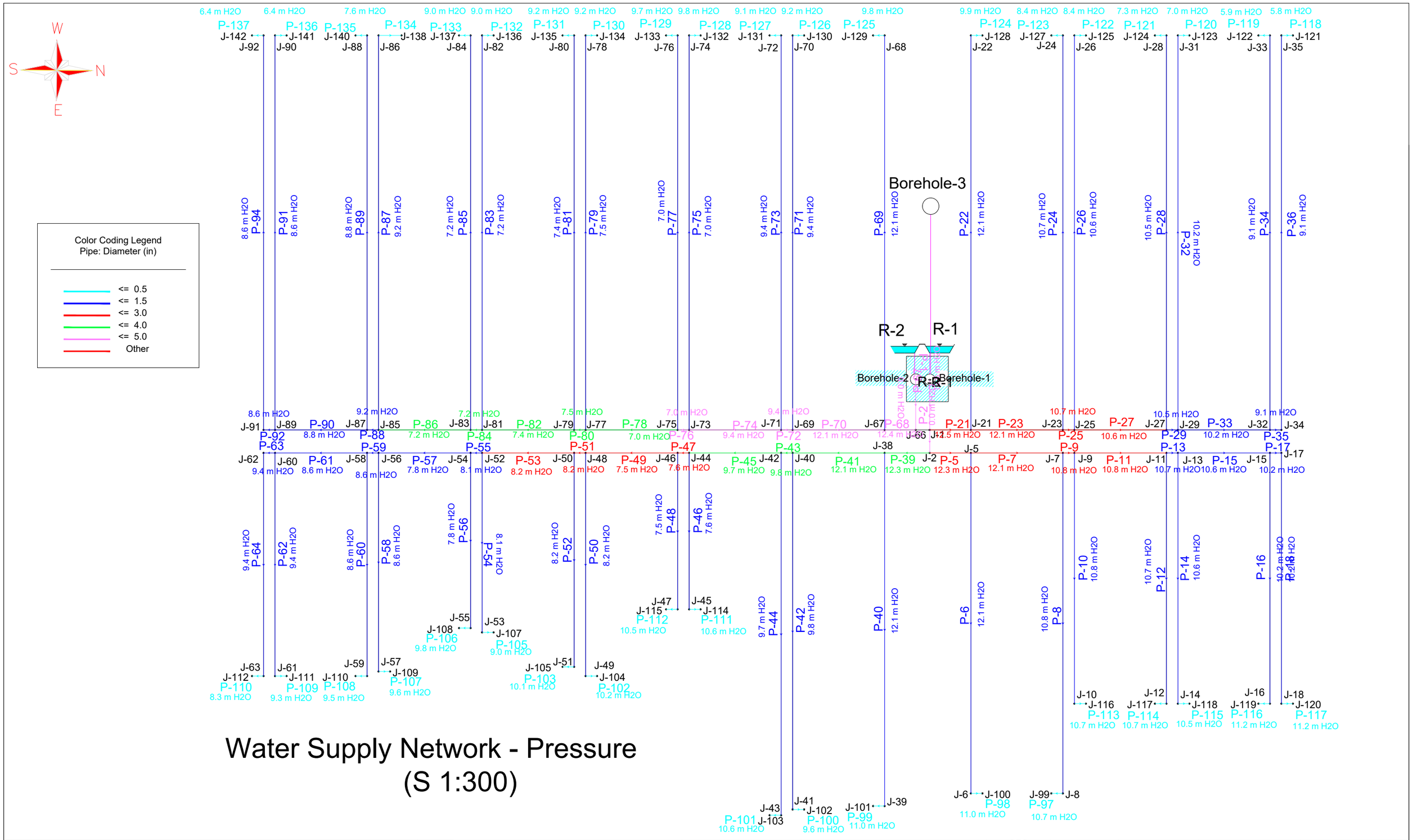

Water Supply Network - Pressure
(S 1:300)

UNHCR Afghanistan	Drawing Title	Project code	Helmand - 000 - 000	Sheet #		Drawn By	Designed By	Checked By
Helmand Water Supply Network- Bolan	Network Pressure	Project Name	Water Supply Network	7	Name	Mohauiddin	Mohauiddin	
		Project Location	Lashkargah City, Helmand Province		Sign			
					Date			

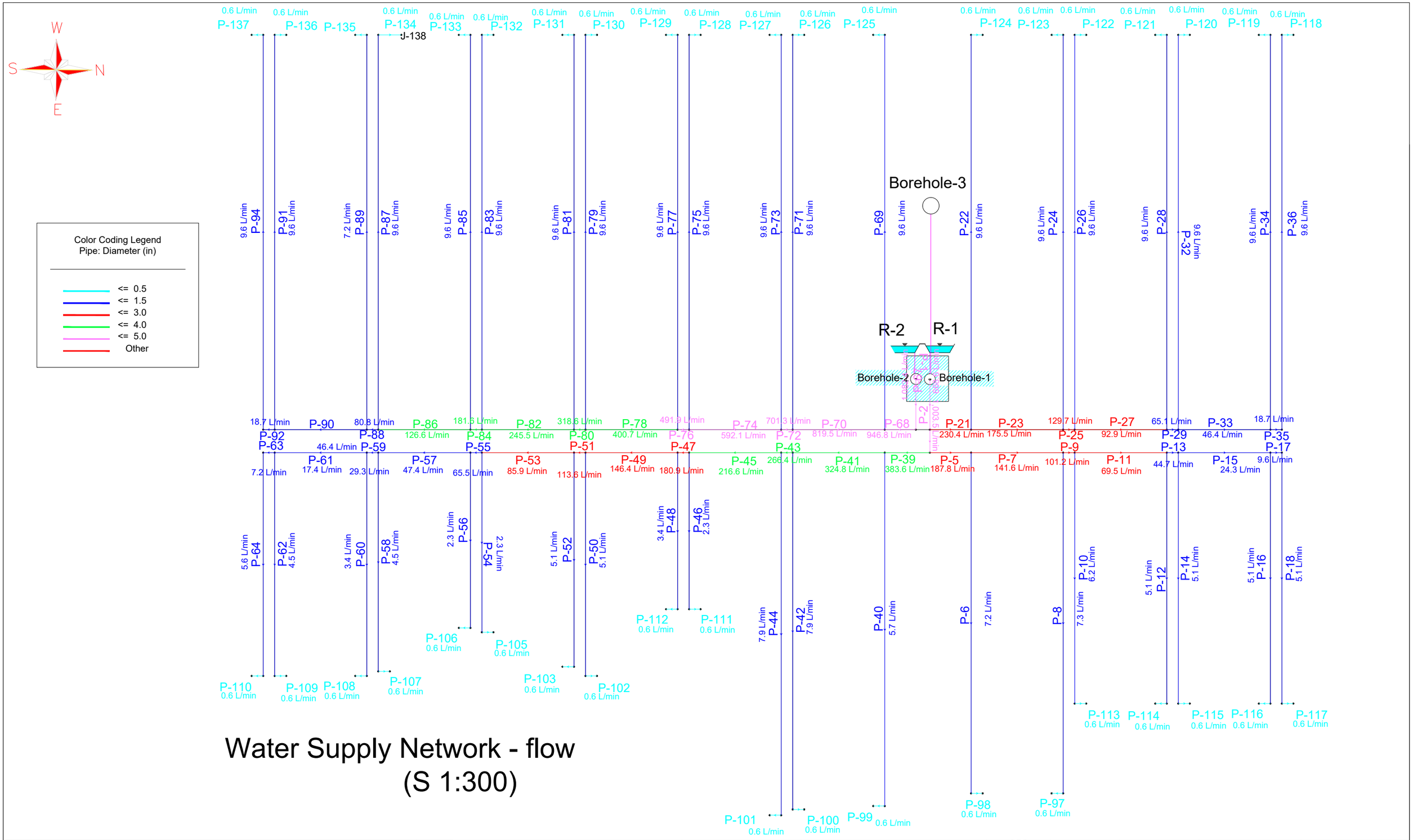

Water Supply Network - flow
(S 1:300)

UNHCR Afghanistan — The UN Refugee Agency	Drawing Title	Project code	Helmand - 000 - 000	Sheet #		Drawn By	Designed By	Checked By
Helmand Water Supply Network- Bolan	Network flow	Project Name	Water Supply Network	8	Name	Mohauiddin	Mohauiddin	
		Project Location	Lashkargah City, Helmand Province		Sign			
					Date			

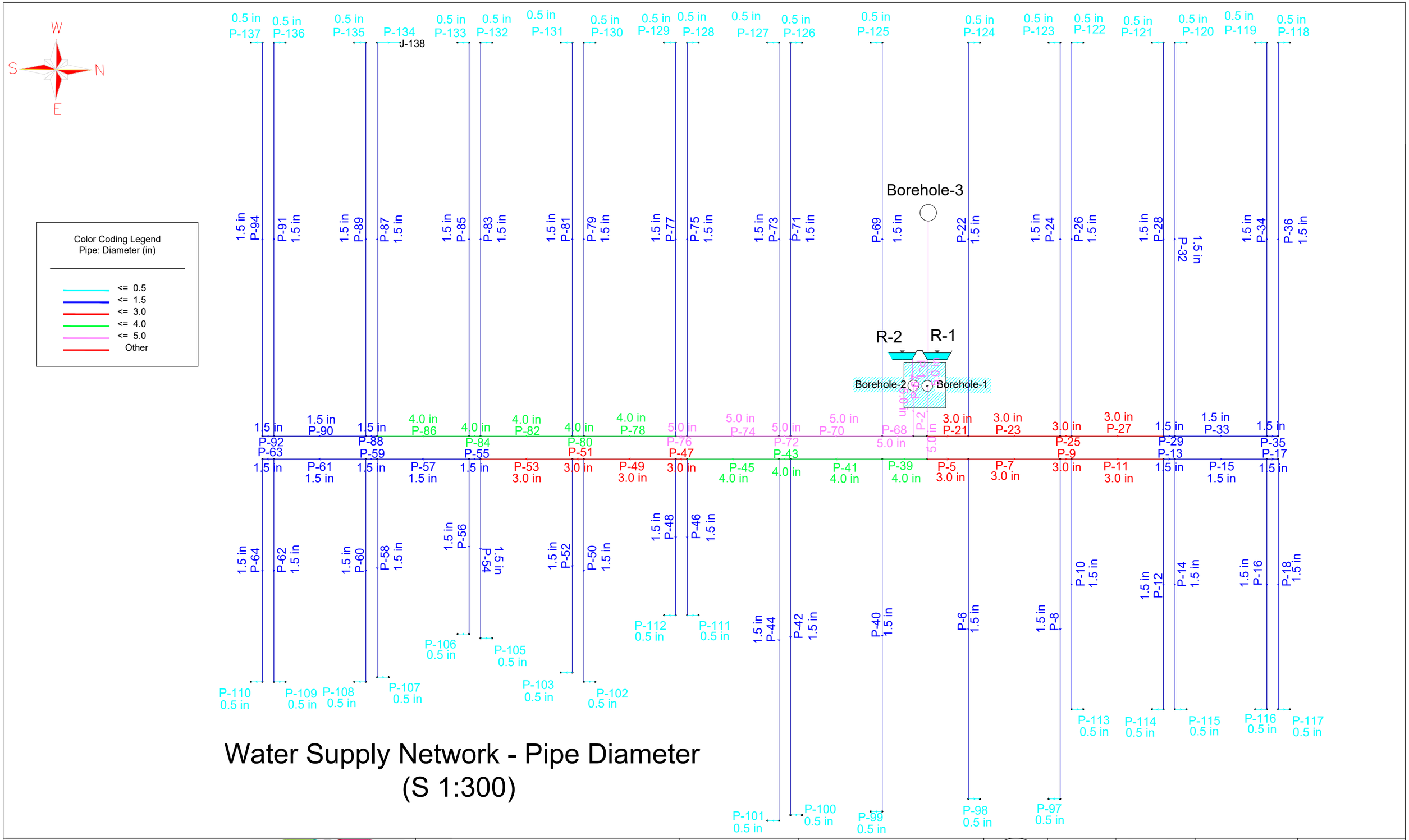

Water Supply Network - Pipe Diameter
(S 1:300)

UNHCR Afghanistan	Drawing Title	Project code	Helmand - 000 - 000	Sheet #		Drawn By	Designed By	Checked By
Helmand Water Supply Network- Bolan	Network Pipe Diameter	Project Name	Water Supply Network	9	Name	Mohauiddin	Mohauiddin	
		Project Location	Lashkargah City, Helmand Province		Sign			
					Date			

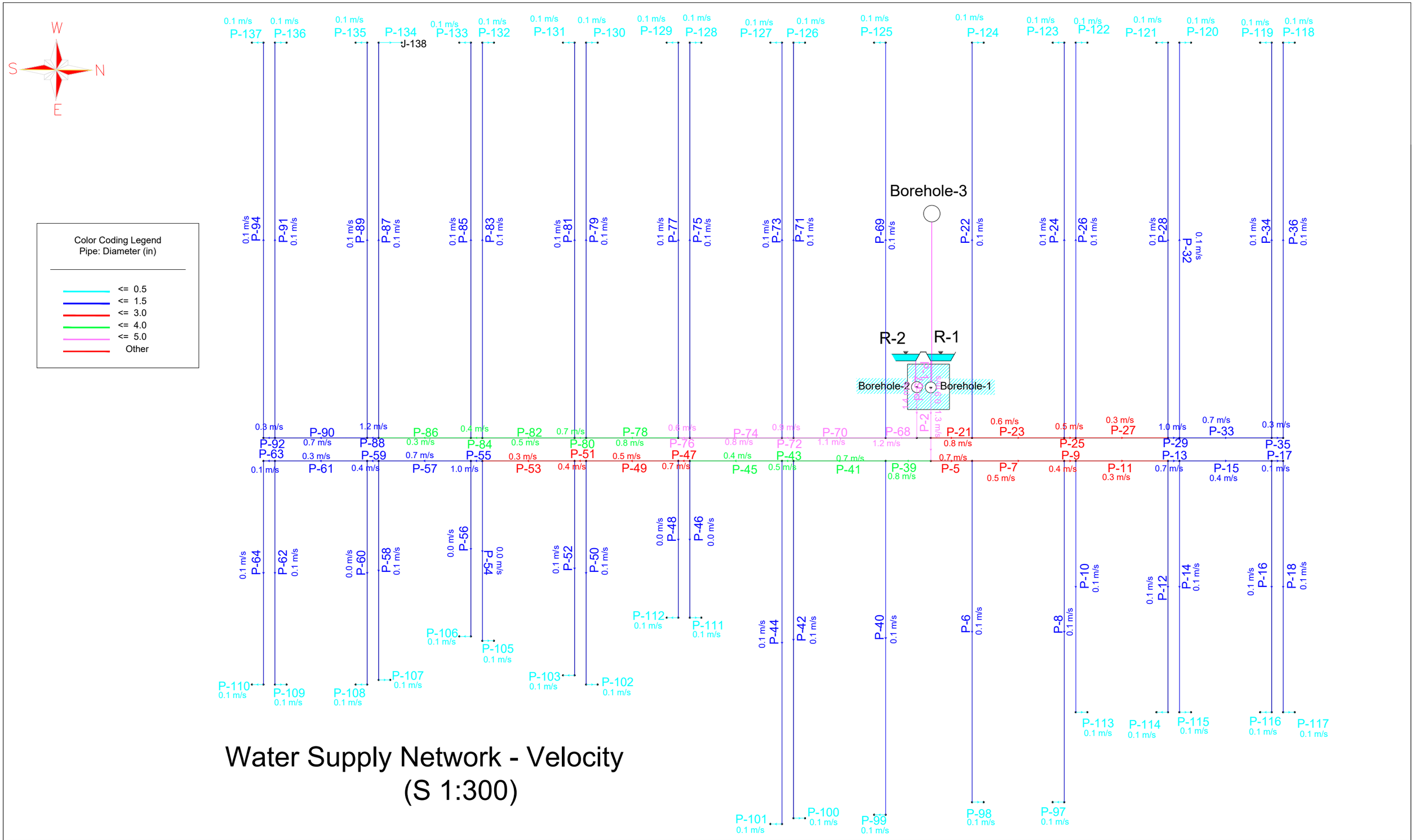

Water Supply Network - Velocity
(S 1:300)

UNHCR Afghanistan	Drawing Title	Project code	Helmand - 000 - 000	Sheet #		Drawn By	Designed By	Checked By
Helmand Water Supply Network- Bolan	Network Velocity	Project Name	Water Supply Network	10	Name	Mohauiddin	Mohauiddin	
		Project Location	Lashkargah City, Helmand Province		Sign			
					Date			

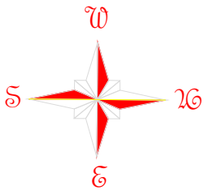

Section A-A <L= 390m

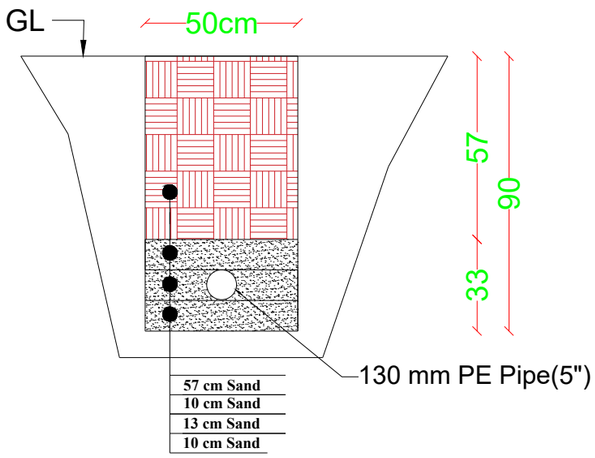

S 1:20

Section B-B,L=590m

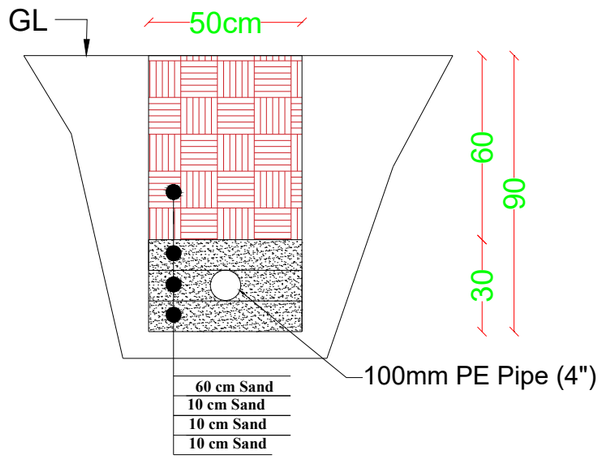

S 1:20

Section C-C, L=720m

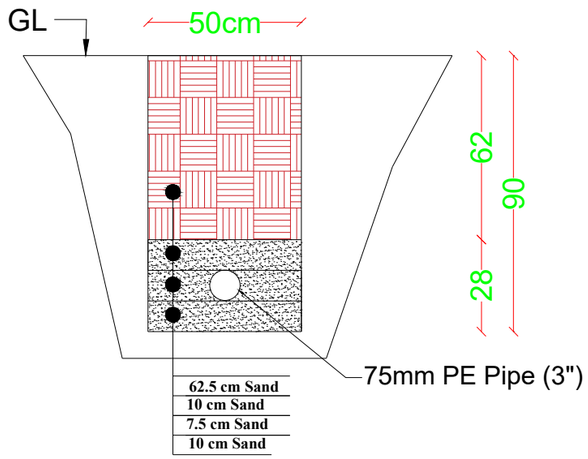

S 1:20

Section D-D , L=11384 m

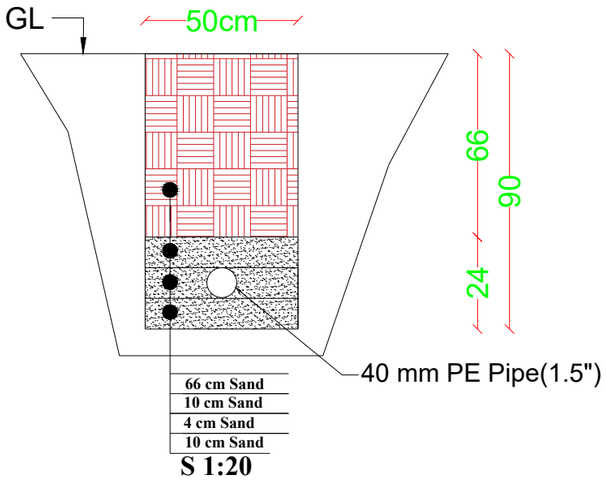

S 1:20

Section D-D , L= 4800m

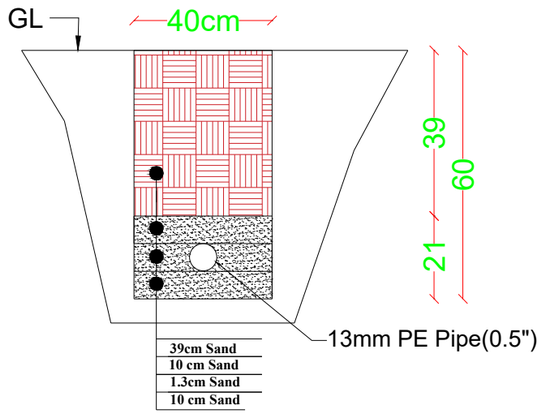

S 1:20

UNHCR Afghanistan	Drawing Title	Project code	Helmand - 000 - 000	Sheet #		Drawn By	Designed By	Checked By
Helmand Water Supply Network- Bolan	Network Pipe Line Sections	Project Name	Water Supply Network	11	Name	Eng Mohauiddin	Eng Mohauiddin	
		Project Location	Lashkargah City, Helmand Province		Sign			
					Date			

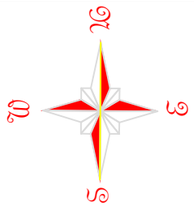

Water Manhole Section A-A
Scale 1:20

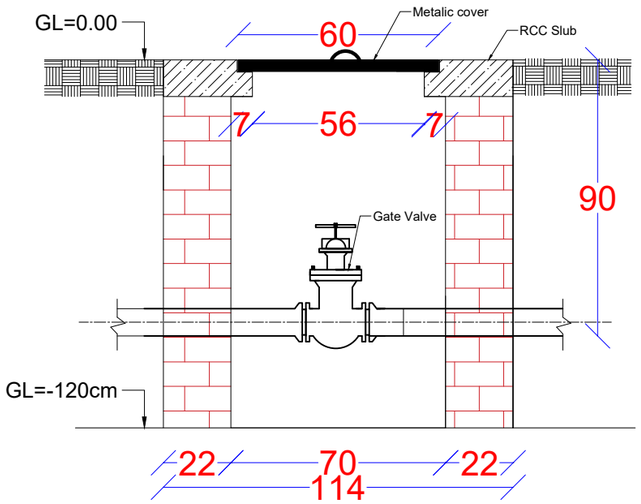

Section B-B
Scale 1:20

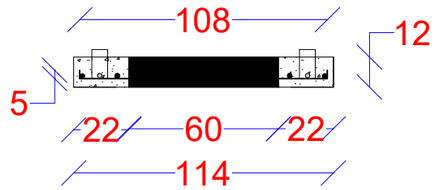

Water Manhole Details
Scale 1:20

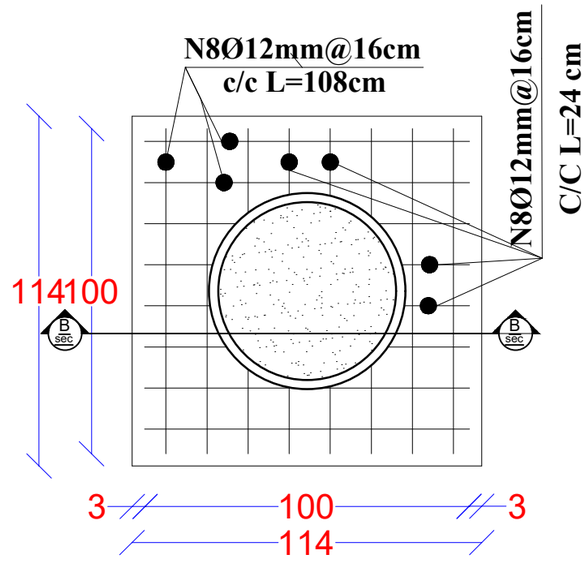

Valve Box Plan For Valve 5",4",3"
of Valve Box =
Scale 1:20

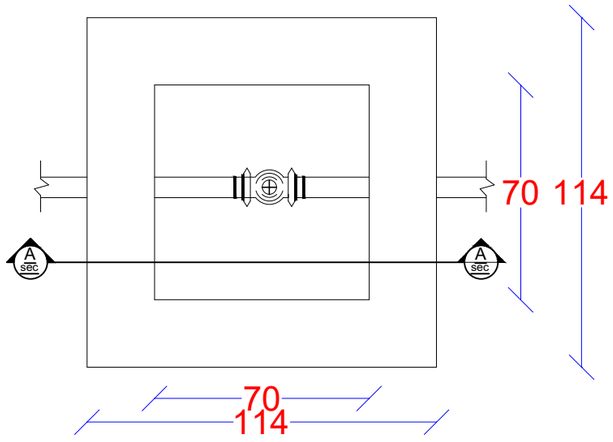

UNHCR Afghanistan	Drawing Title	Project code	Helmand - 000 - 000	Sheet #		Drawn By	Designed By	Checked By
Helmand Water Supply Network- Bolan	Manhole Details	Project Name	Water Supply Network	12	Name	Eng Mohauiddin	Eng Mohauiddin	
		Project Location	Lashkargah City, Helmand Province		Sign			
					Date			

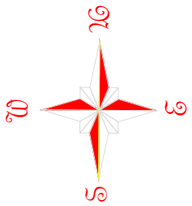

Foundation Plan
S 1:100

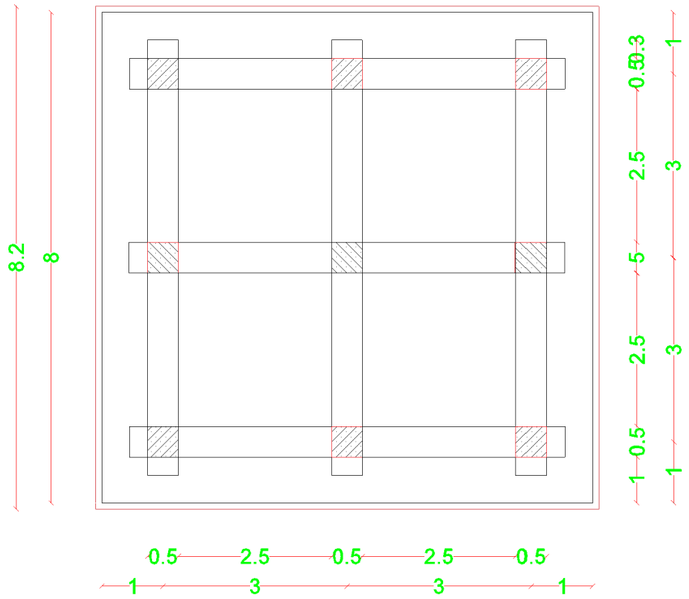

Foundation Section
1:100

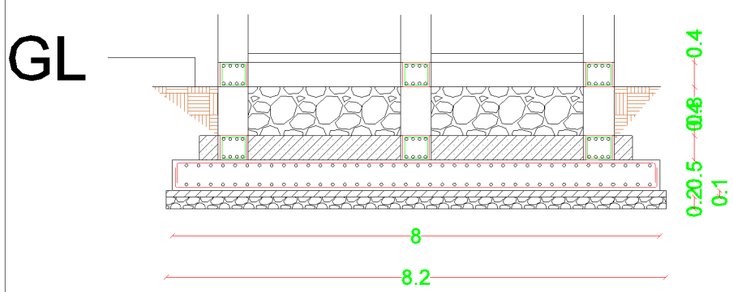

PCC 10cm
RCC Beam 40cm
Extended Column 80cm
RCC Beam 40cm
PCC 10cm
Boulder Paving 20cm

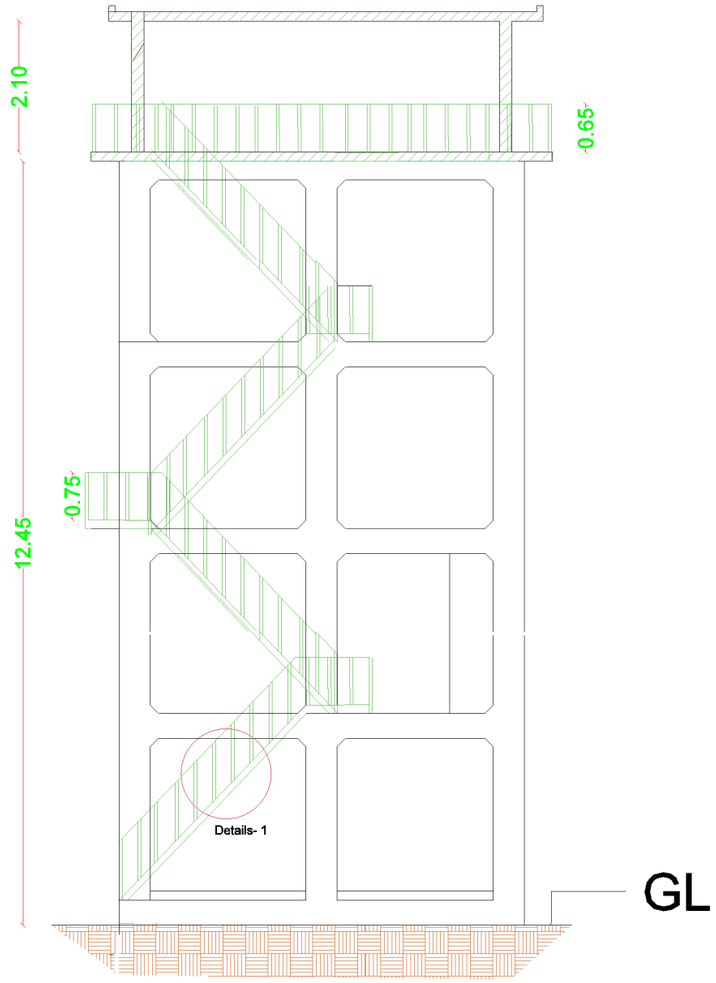

Elevator Tank Elevation

UNHCR Afghanistan	Drawing Title	Project code	Helmand - 000 - 000	Sheet #		Drawn By	Designed By	Checked By
Helmand Water Supply Network- Bolan	Reservoir Dtails	Project Name	Water Supply Network	13	Name	Eng Mohauiddin	Eng Mohauiddin	
		Project Location	Lashkargah City, Helmand Province		Sign			
					Date			

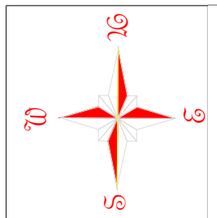

Detailing-2 (S 1:50)

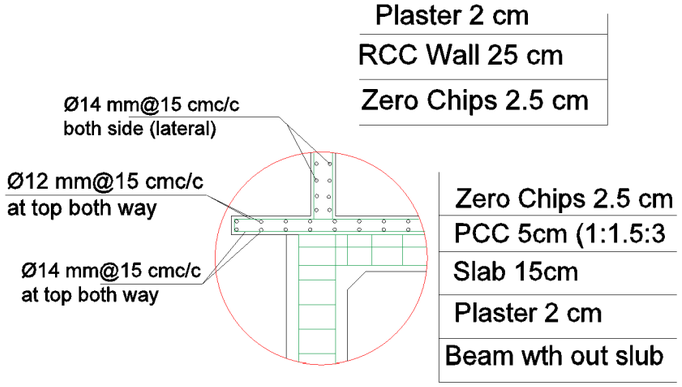

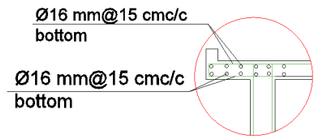

Detailing-1 (S 1:50)

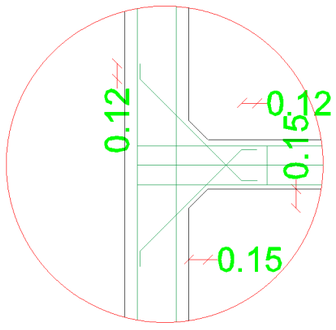

Detailing- 3(S 1:50)

RCC Water Reservoir

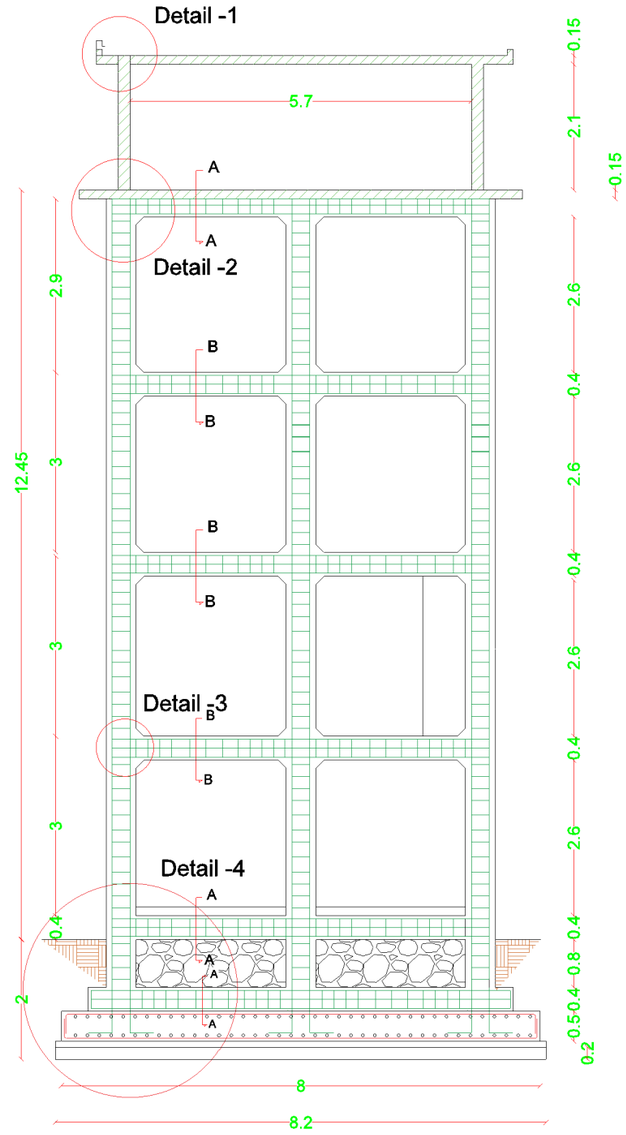

Section A-A (Scale1:100)

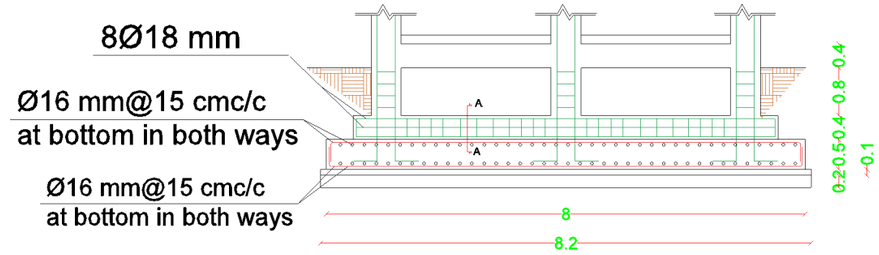

Foundation Section (Scale- 1:100)

UNHCR Afghanistan	Drawing Title	Project code	Helmand - 000 - 000	Sheet #		Drawn By	Designed By	Checked By
Helmand Water Supply Network- Bolan	Reservoir Dtails	Project Name	Water Supply Network	14	Name	Eng Mohauiddin	Eng Mohauiddin	
		Project Location	Lashkargah City, Helmand Province		Sign			
					Date			

Water Tank Section
S 1:100

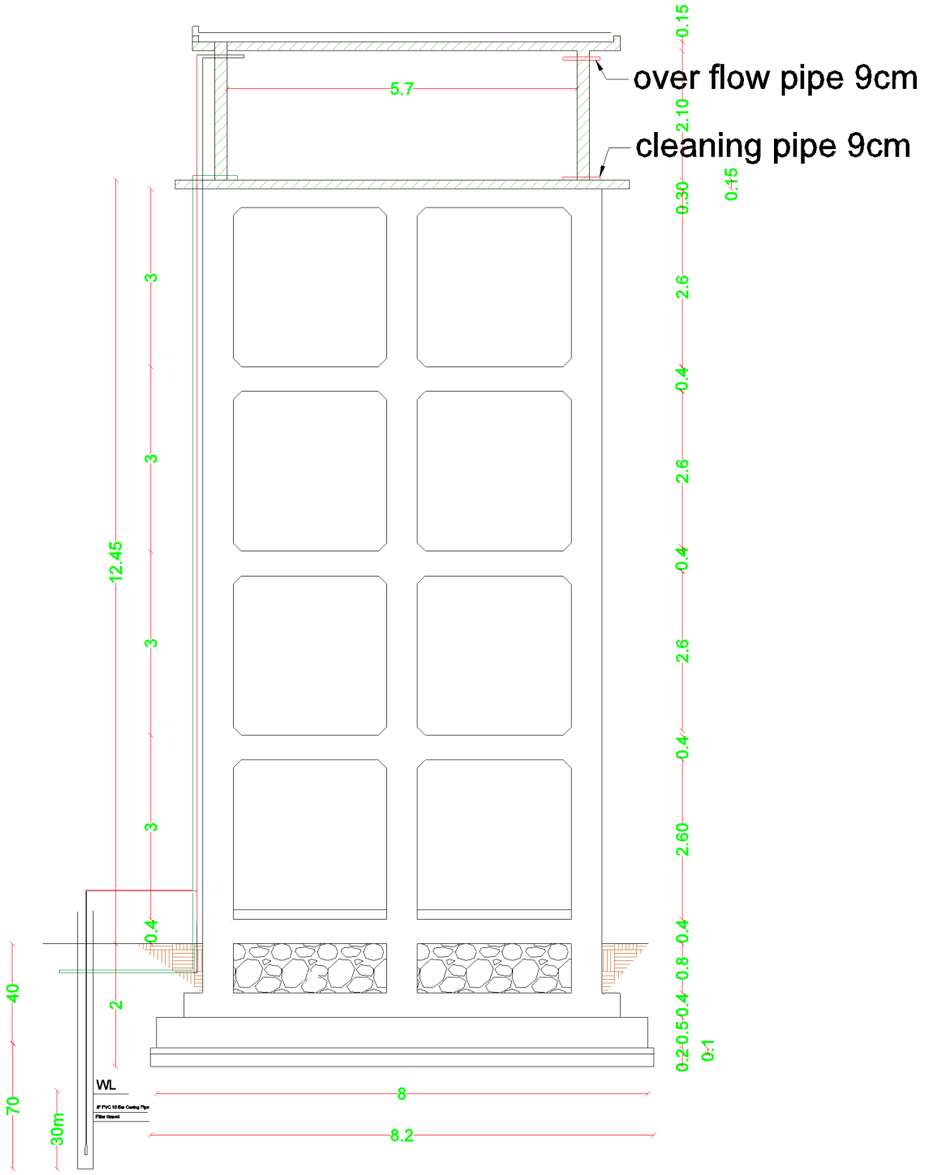

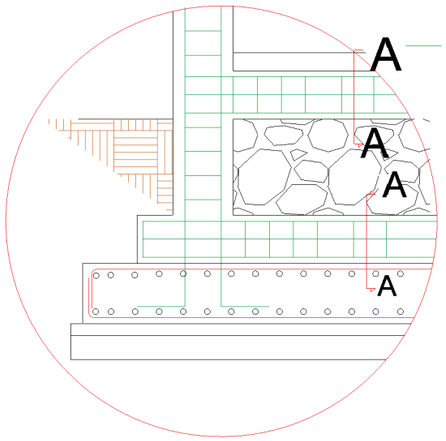

PCC 10 CM
RCC Beam 40 cm
stone masonary 80 cm
RCC B eam 40 cm
RCC Mat foundation 50 cm
PCC 10 cm
BOULDER paving 20 cm

Detailing-4 Scale 1:50

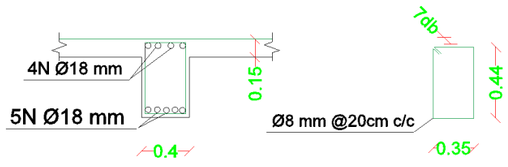

Section A-A , Scale 1:50

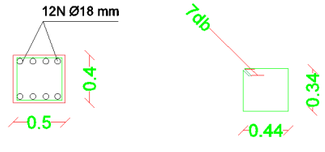

Section B-B

UNHCR Afghanistan	Drawing Title	Project code	Helmand - 000 - 000	Sheet #		Drawn By	Designed By	Checked By
Helmand Water Supply Network- Bolan	Reservoir Dtails	Project Name	Water Supply Network	15	Name	Eng Mohauiddin	Eng Mohauiddin	
		Project Location	Lashkargah City, Helmand Province		Sign			
					Date			

Water Tank Wall Slab plan (scale 1:100

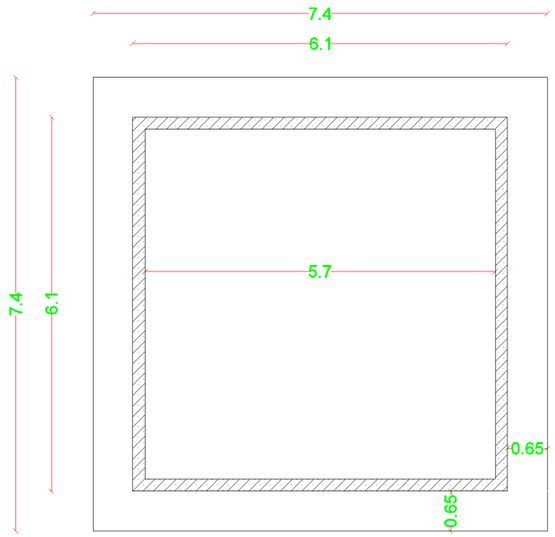

Foundation Reinforcement Plan(S 1:100)

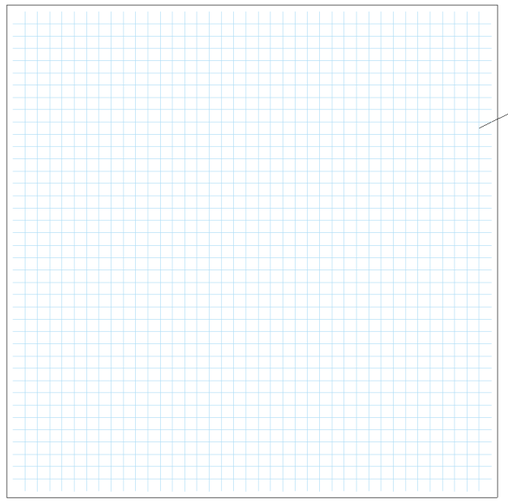

Ø16 mm @ 15 cmc/c top and bottom in both ways

Water Tank Wall Reinforcement plan(S 1:50)

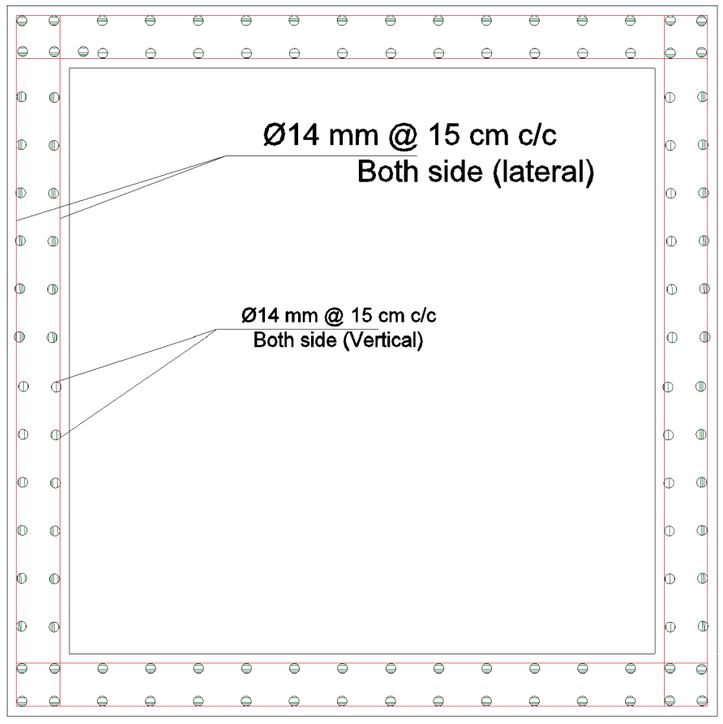

Water Tank SlabReinforcement plan (s 1:100)

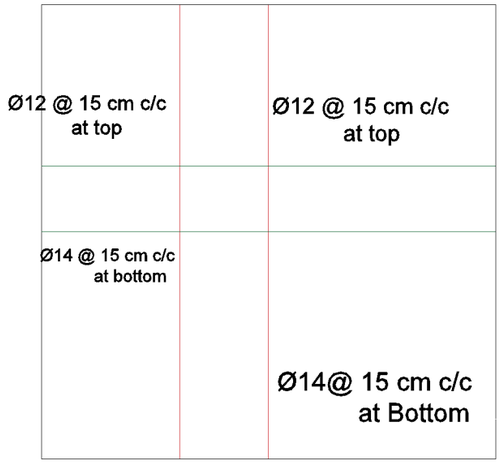

UNHCR Afghanistan	Drawing Title	Project code	Helmand - 000 - 000	Sheet #		Drawn By	Designed By	Checked By
Helmand Water Supply Network- Bolan	Reservoir Details	Project Name	Water Supply Network	16	Name	Eng Mohauiddin	Eng Mohauiddin	
		Project Location	Lashkargah City, Helmand Province		Sign			
					Date			

Boundary wall for Pump house

Plan 0f Burnet Brick with steel frem boundary wall

SCALE 1:100

Section A-A

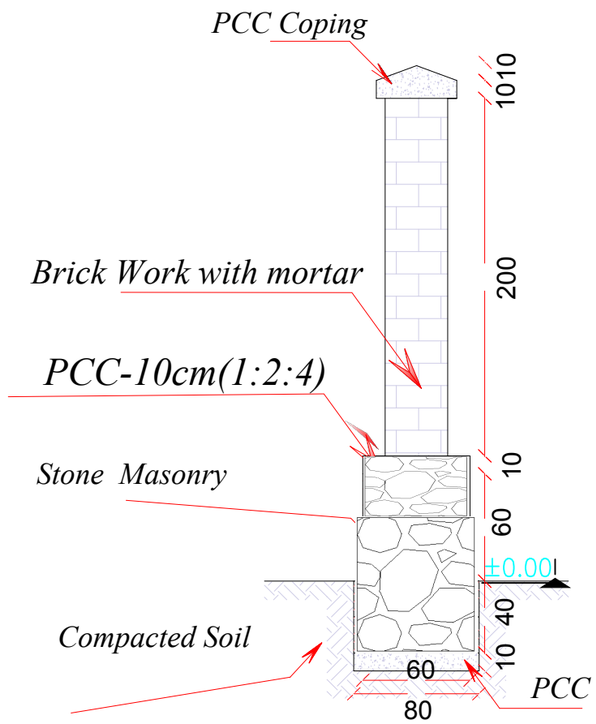

SCALE 1:100

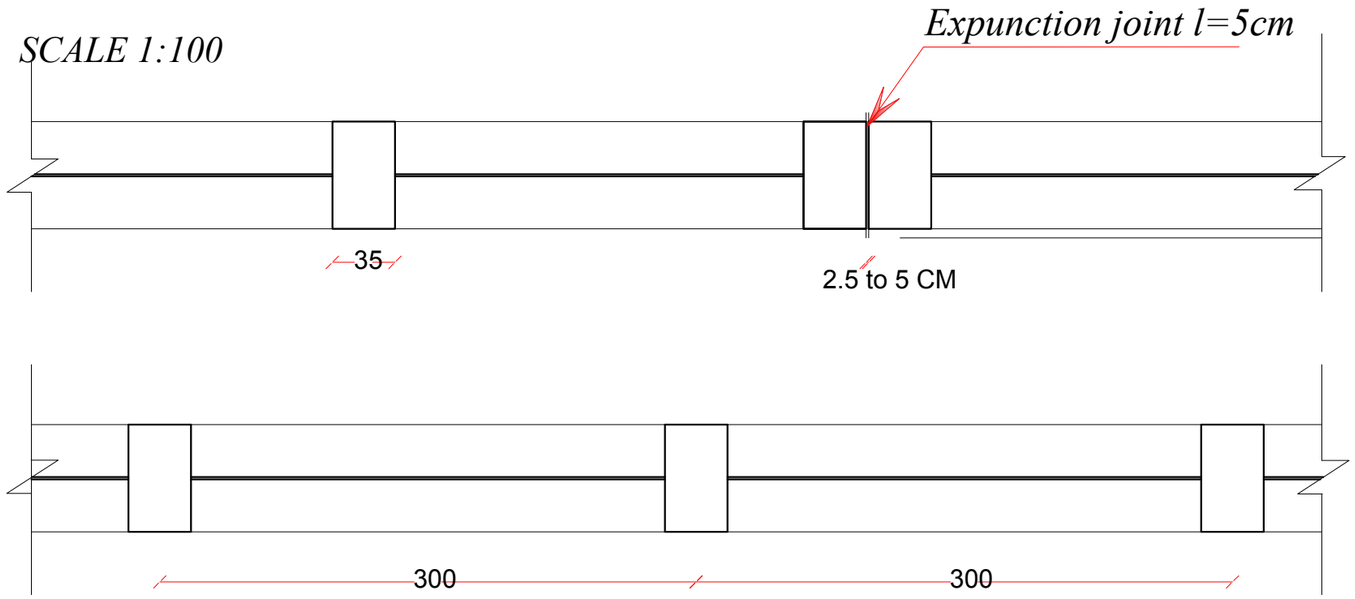

Lenght of Stone masonry boundary wall=120m

Note:

1-All dimension are in centimeters .
2-PCC shall be (1:2:4).
3-Mortar for stone masonry shall be (1:4).
4-Mortar for stone masonry shall be (1:3).
5-RCC shall be (1:1,5:3).
6-All steel bars should be not eroded or lubricated and has to be clean.
7-All steel bars should be Class(A1) Ra= 2100 Kg/cm² .
8-The curing must be not less than (28) days.

UNHCR Afghanistan	Drawing Title	Project code	Helmand – 000 – 000	Sheet#		Drawn By	Designed By	Checked By
Helmand Water Supply Network- Nahr-e- Saraj Mina	Boundry Wall Details	Project Name	Water Supply Network	17	Name	Eng Amir	Eng Amir	
		Project Location	Lashkargah City, Helmand Province		Sign			
					Date			

Boundary wall of pump House building
Main & Smal Steel gate .

SCALE 1:100

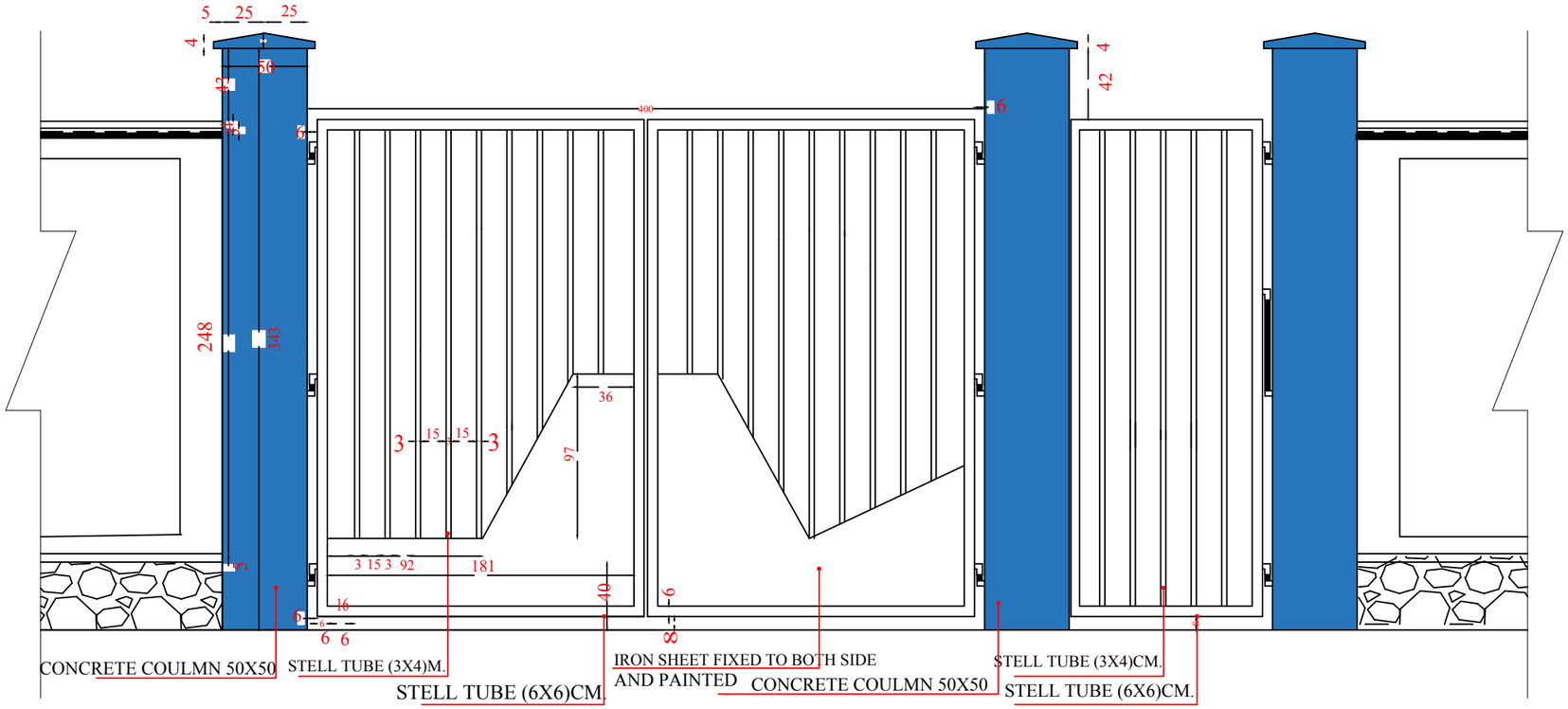

Note:

1-All dimension are in centimeters .
2-PCC shall be (1:2:4).
3-Mortar for stone masonry shall be (1:4).
4-Mortar for stone masonry shall be (1:3).
5-RCC shall be (1:1,5:3).
6-All steel bars should be not eroded or lubricated and has to be clean.
7-All steel bars should be Class(A1) Ra= 2100 Kg/cm² .
8-The curing must be not less than (28) days.

UNHCR Afghanistan	Drawing Title	Project code	Helmand – 000 – 000	Sheet#		Drawn By	Designed By	Checked By
Helmand Water Supply Network- Nahr-e- Saraj Mina	Door Details	Project Name	Water Supply Network	18	Name	Eng Amir	Eng Amir	
		Project Location	Lashkargah City, Helmand Province		Sign			
					Date			

Plan & section of Power Hous control Room

S I:100

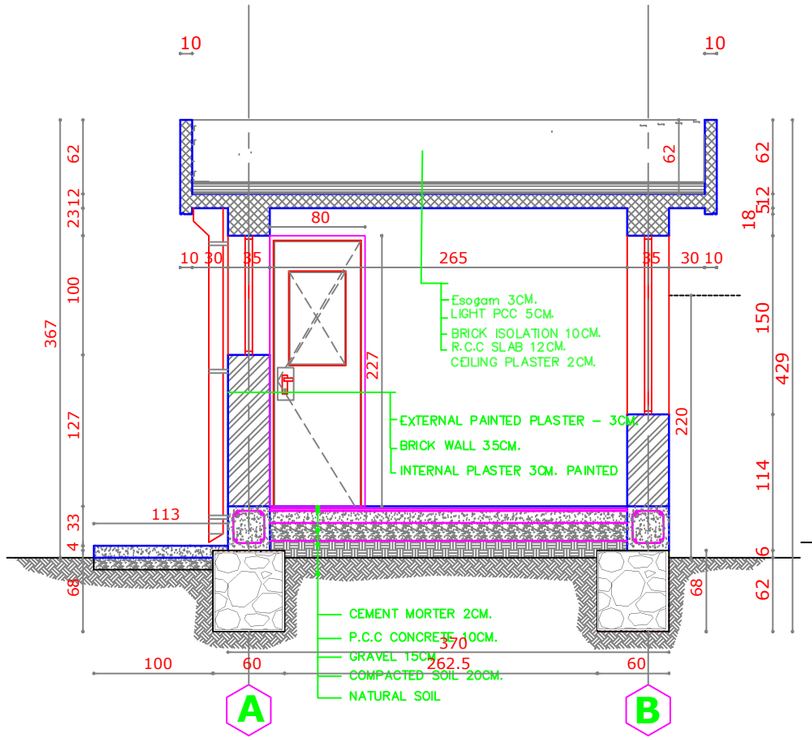

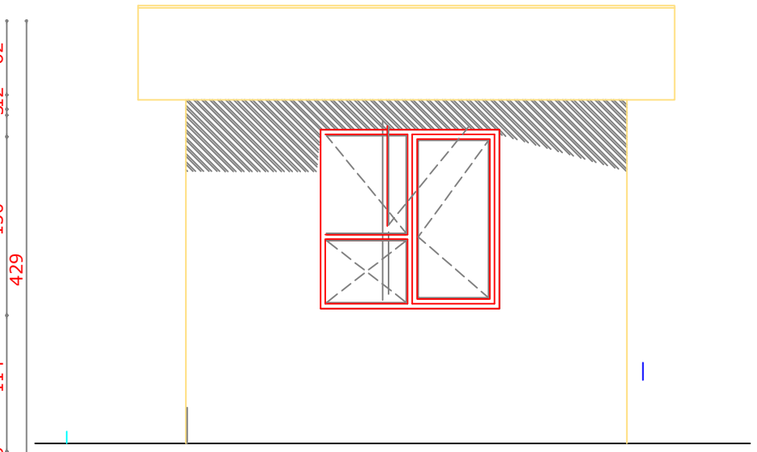

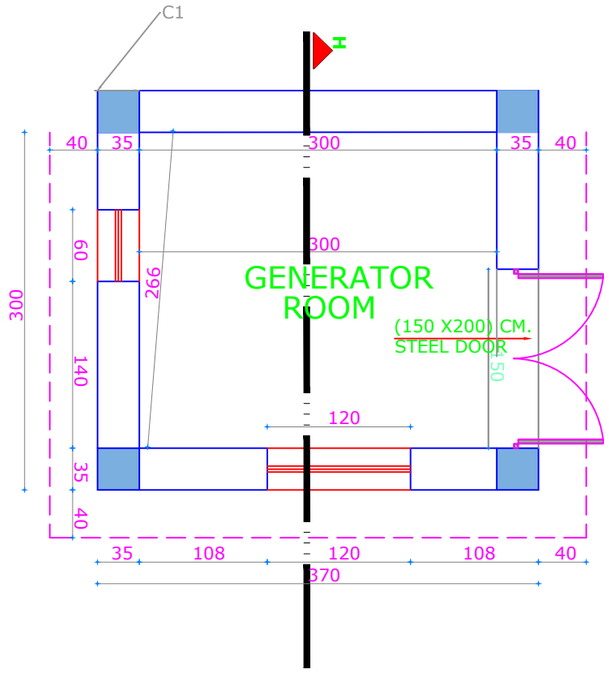

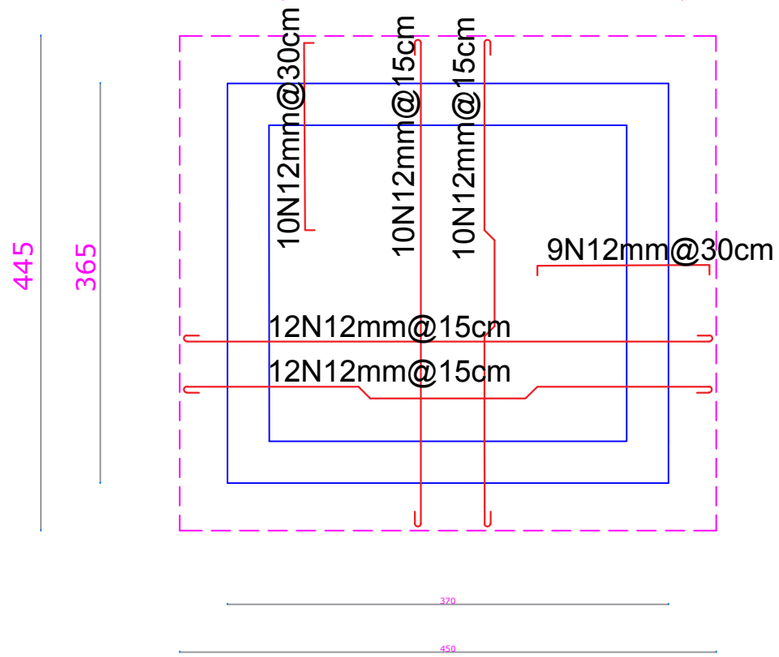

FOOTING NO C1

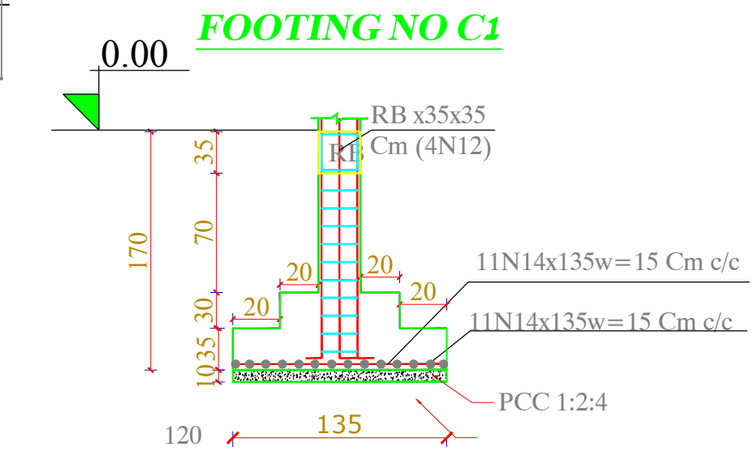

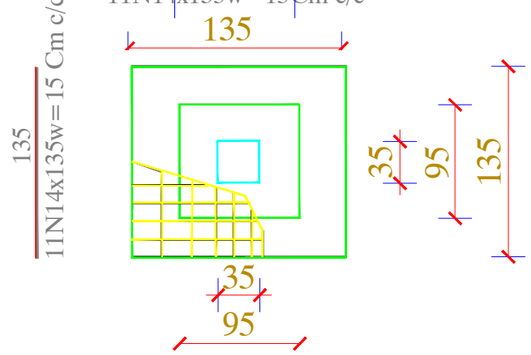

Note:

1-All dimension are in centimeters .
2-PCC shall be (1:2:4).
3-Mortar for stone masonry shall be (1:4).
4-Mortar for stone masonry shall be (1:3).
5-RCC shall be (1:1,5:3).
6-All steel bars should be not eroded or lubricated and has to be clean.
7-All steel bars should be Class(A1) Ra= 2100 Kg/cm² .
8-The curing must be not less than (28) days.

UNHCR Afghanistan	Drawing Title	Project code	Helmand – 000 – 000	Sheet#		Drawn By	Designed By	Checked By
Helmand Water Supply Network- Nahr-e- Saraj Mina	Control Room Details	Project Name	Water Supply Network	19	Name	Eng Amir	Eng Amir	
		Project Location	Lashkargah City, Helmand Province		Sign			
					Date			

Plan & section of Gourd Room

S I:100

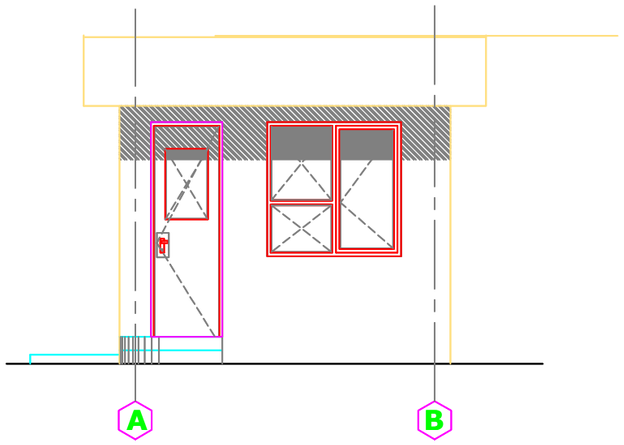

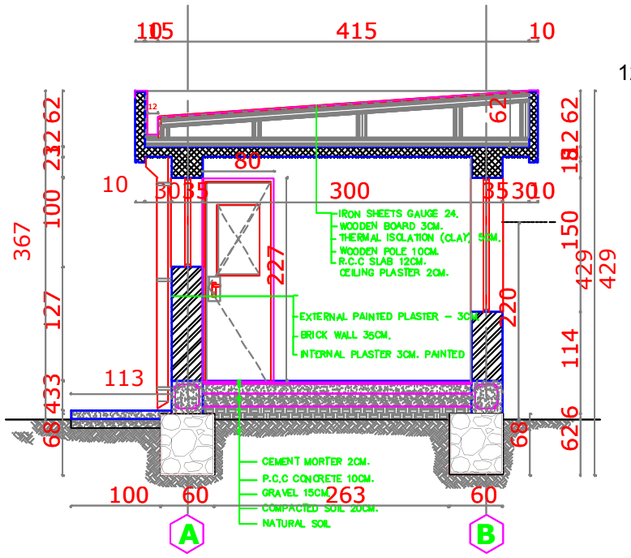

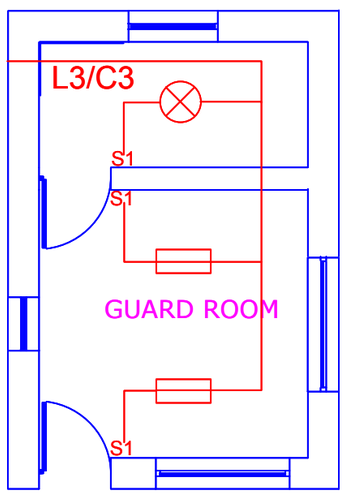

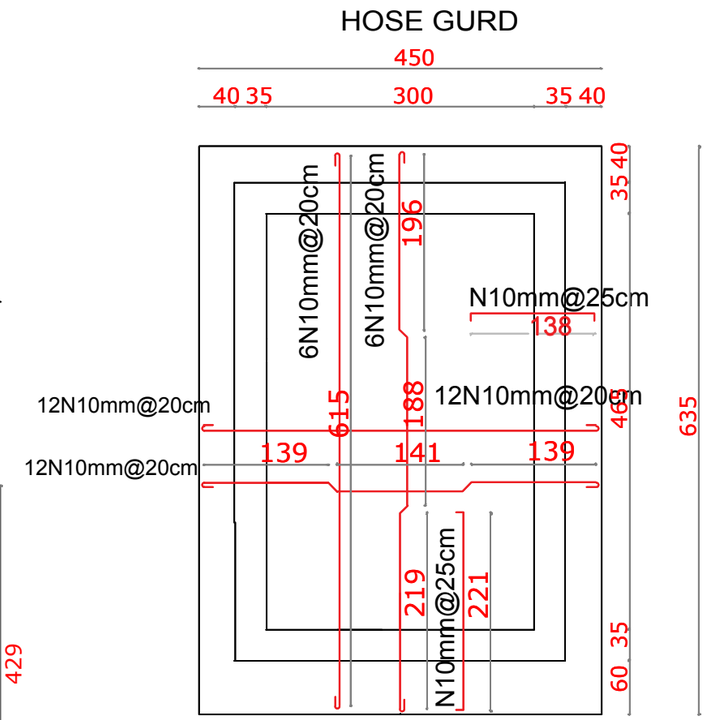

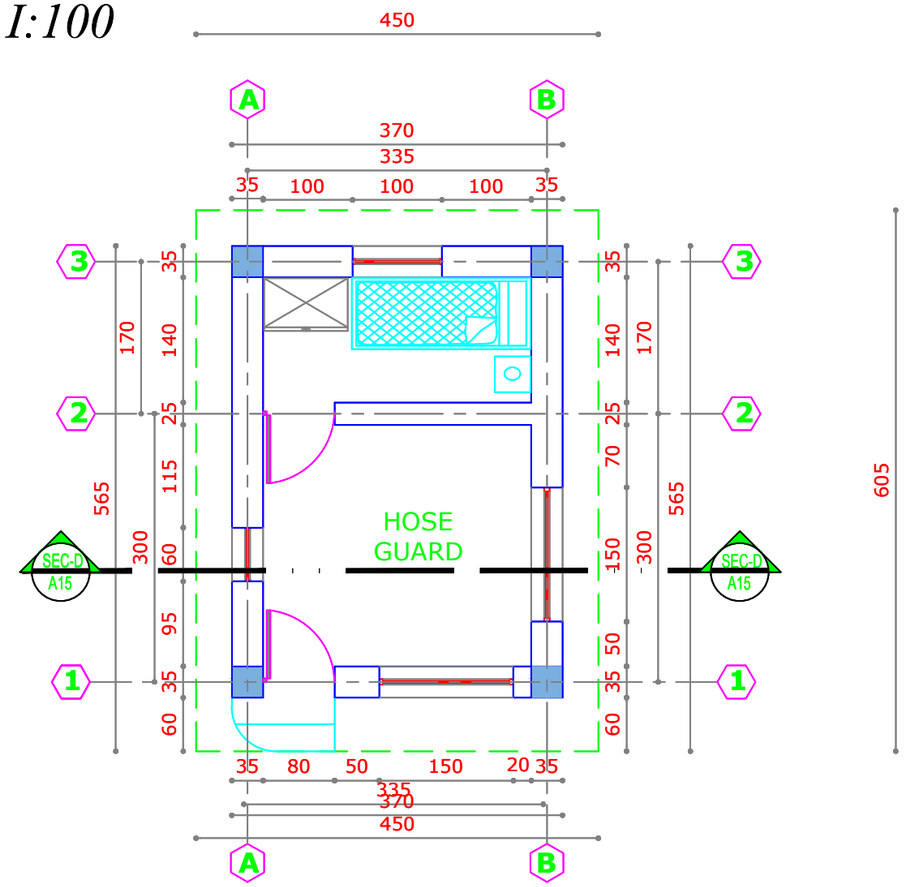

FOOTING NO C1

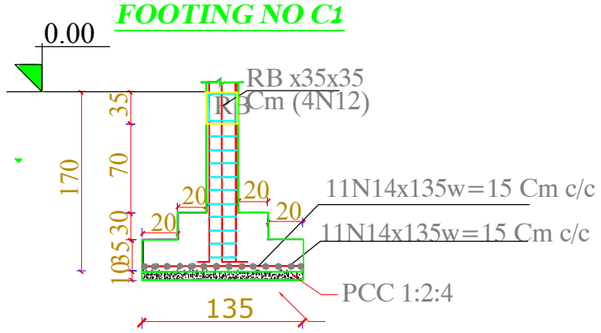

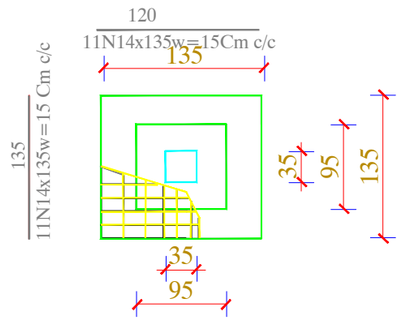

Note:

1-All dimension are in centimeters .
2-PCC shall be (1:2:4).
3-Mortar for stone masonry shall be (1:4).
4-Mortar for stone masonry shall be (1:3).
5-RCC shall be (1:1,5:3).
6-All steel bars should be not eroded or lubricated and has to be clean.
7-All steel bars should be Class(A1) Ra= 2100 Kg/cm² .
8-The curing must be not less than (28) days.

UNHCR Afghanistan	Drawing Title	Project code	Helmand – 000 – 000	Sheet#		Drawn By	Designed By	Checked By
Helmand Water Supply Network- Nahr-e- Saraj Mina	Gaurd Room Details	Project Name	Water Supply Network	20	Name	Eng Amir	Eng Amir	
		Project Location	Lashkargah City, Helmand Province		Sign			
					Date			

PLAN OF SEPTIC TANK

S1:100

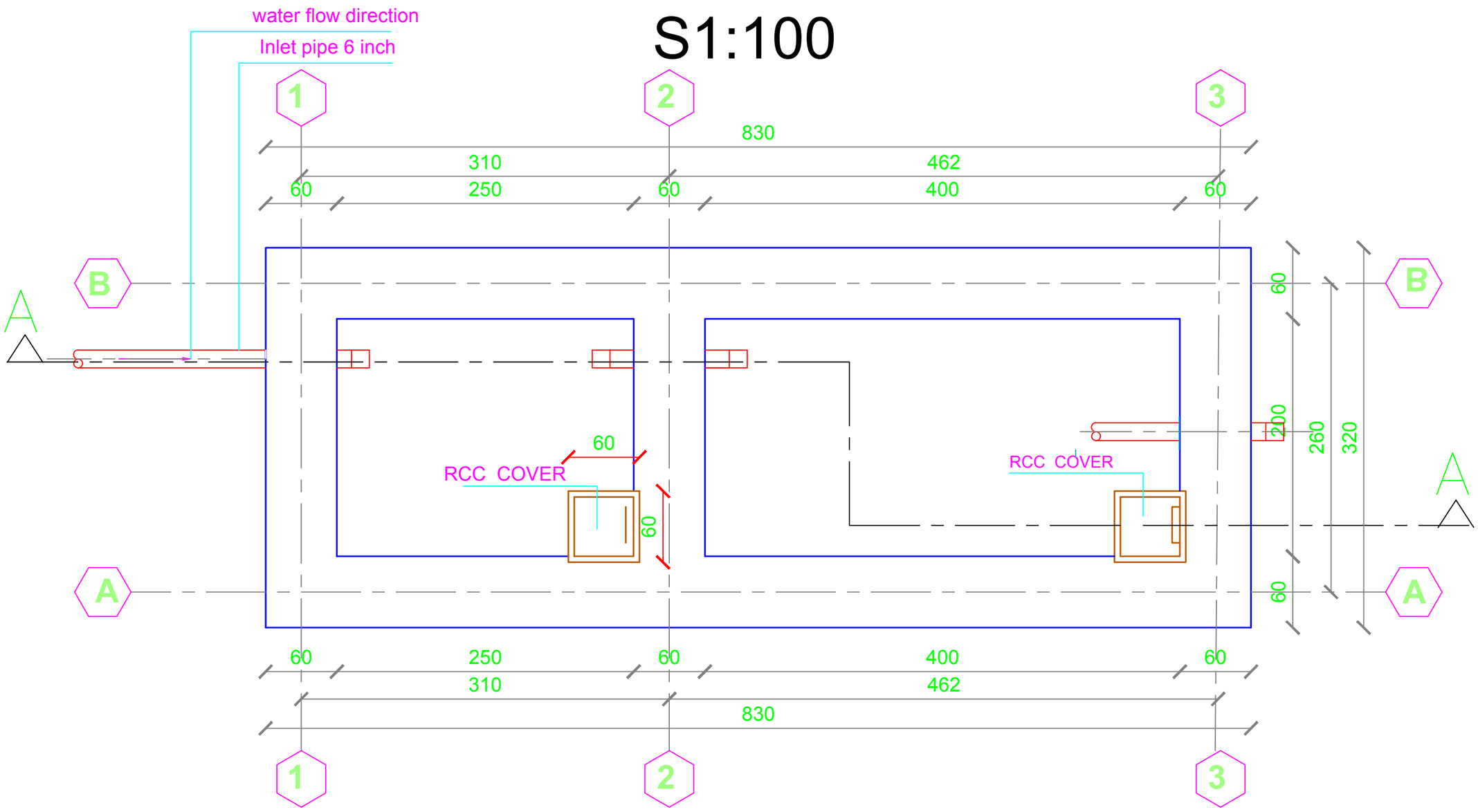

UNHCR Afghanistan / Helmand Water Supply Network- Nahr-e- Saraj Mina	Drawing Title: Septic Tank Plan	Project code	Helmand – 000 – 000	Sheet# 21		Drawn By	Designed By	Checked By
		Project Name	Water Supply Network		Name	Eng Amir	Eng Amir	
		Project Location	Lashkargah City, Helmand Province		Sign			
					Date			

SEPTIC TANK SECTION A-A
S1:100

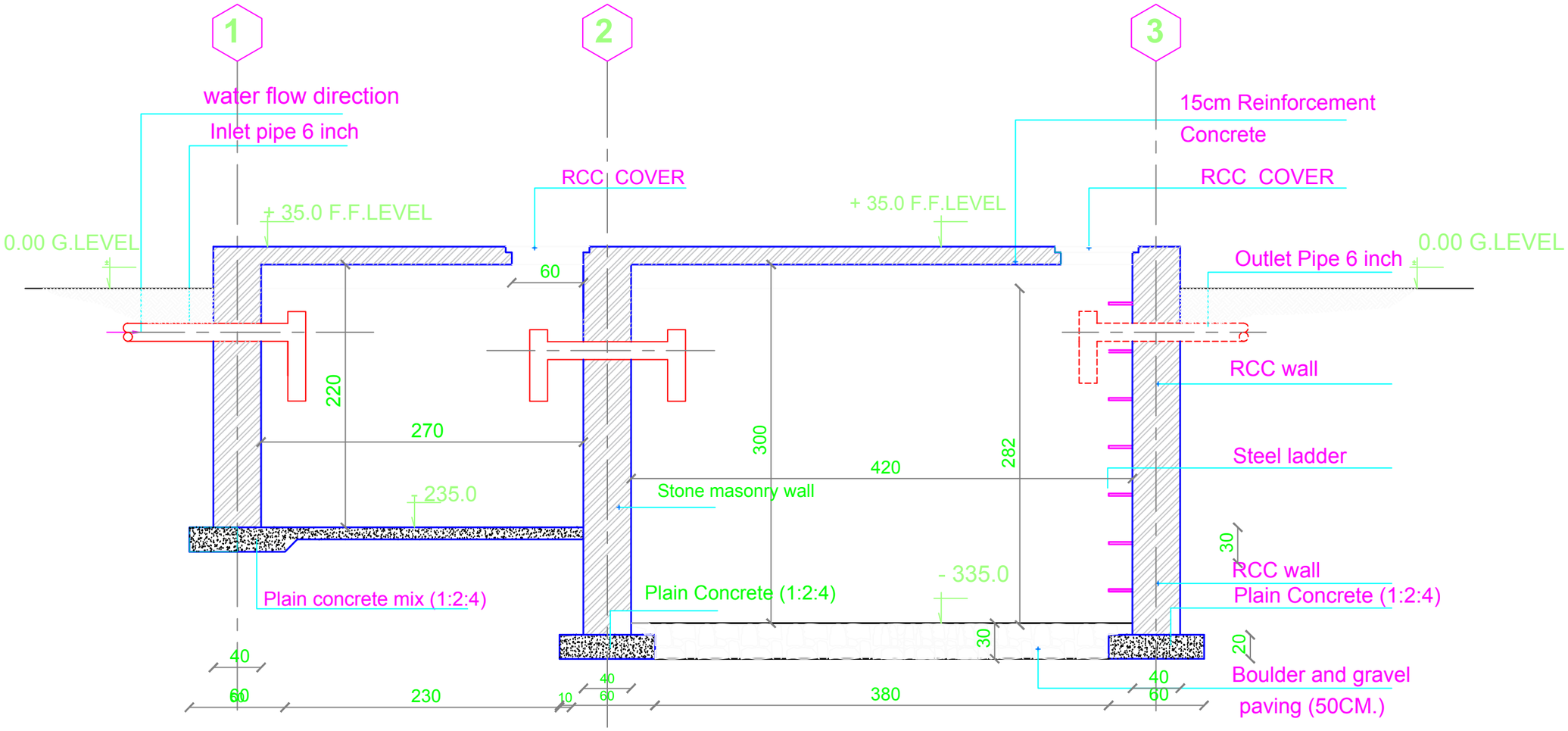

UNHCR Afghanistan	Drawing Title	Project code	Helmand – 000 – 000	Sheet#		Drawn By	Designed By	Checked By
Helmand Water Supply Network- Nahr-e- Saraj Mina	Septic Tank Section	Project Name	Water Supply Network	22	Name	Eng Amir	Eng Amir	
		Project Location	Lashkargah City, Helmand Province		Sign			
					Date			

CRASS SECTION SEPTIC TANK A-A
S1:100

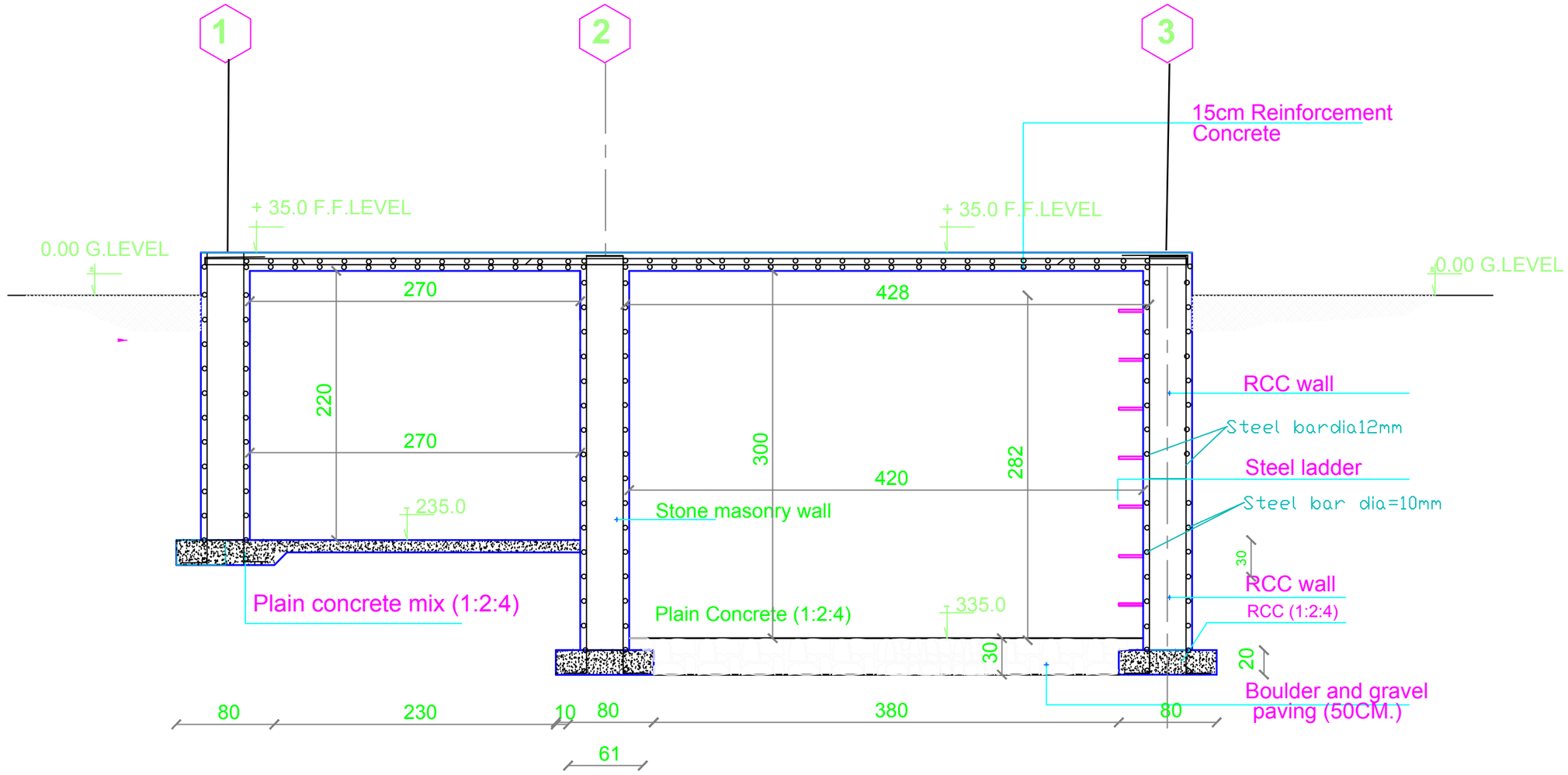

UNHCR Afghanistan	Drawing Title	Project code	Helmand – 000 – 000	Sheet#		Drawn By	Designed By	Checked By
Helmand Water Supply Network- Nahr-e- Saraj Mina	Septic Tank Section	Project Name	Water Supply Network	23	Name	Eng Amir	Eng Amir	
		Project Location	Lashkargah City, Helmand Province		Sign			
					Date			

Plan 0f Construction Toilets Bar Bending Schedule Of Toilet

SCALE 1:100

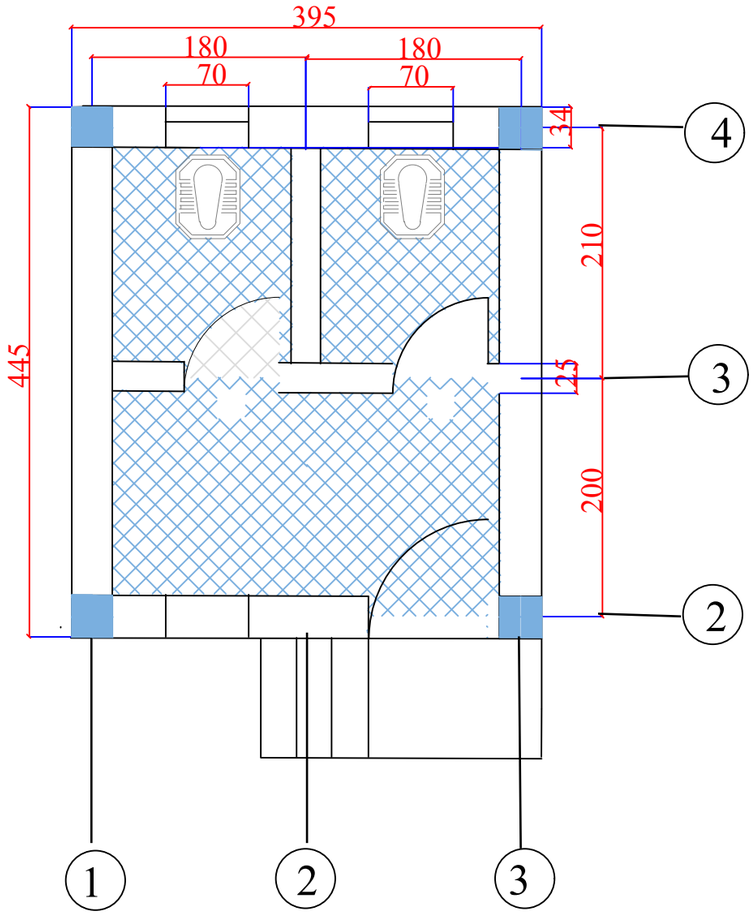

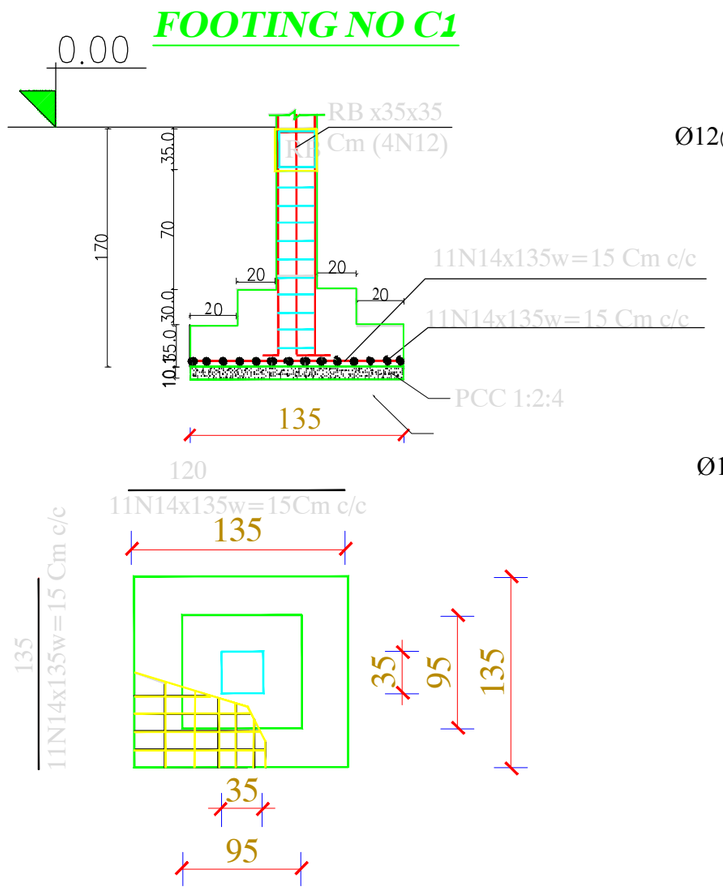

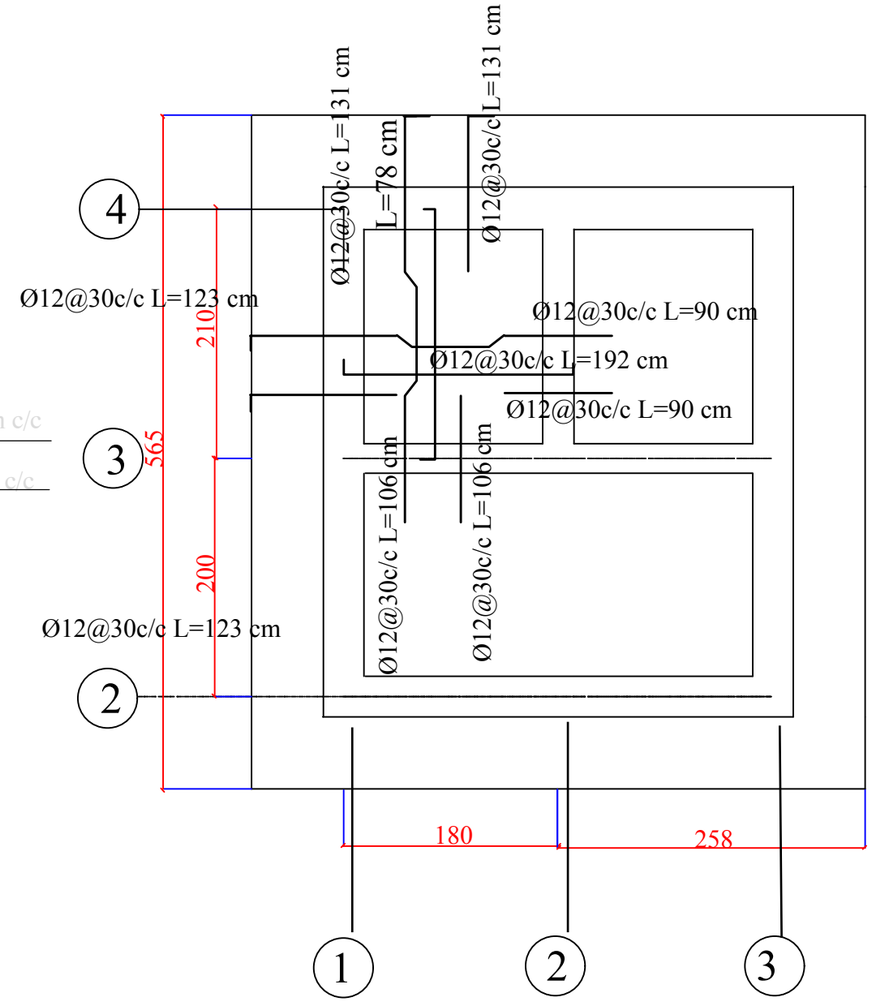

Note:

1-All dimension are in centimeters .
2-PCC shall be (1:2:4).
3-Mortar for stone masonry shall be (1:4).
4-Mortar for Brick masonry shall be (1:3).
5-RCC shall be (1:1,5:3).
6-All steel bars should be not eroded or lubricated and has to be clean.
7-All steel bars should be Class(A1) Ra= 2100 Kg/cm² .
8-The curing must be not less than (28) days.

UNHCR Afghanistan	Drawing Title	Project code	Helmand – 000 – 000	Sheet#		Drawn By	Designed By	Checked By
Helmand Water Supply Network- Nahr-e- Saraj Mina	Toilet Details	Project Name	Water Supply Network	24	Name	Eng Amir	Eng Amir	
		Project Location	Lashkargah City, Helmand Province		Sign			
					Date			

Front Preview 0f Construction Toilets

SCALE 1:100

Section A-A

SCALE 1:100

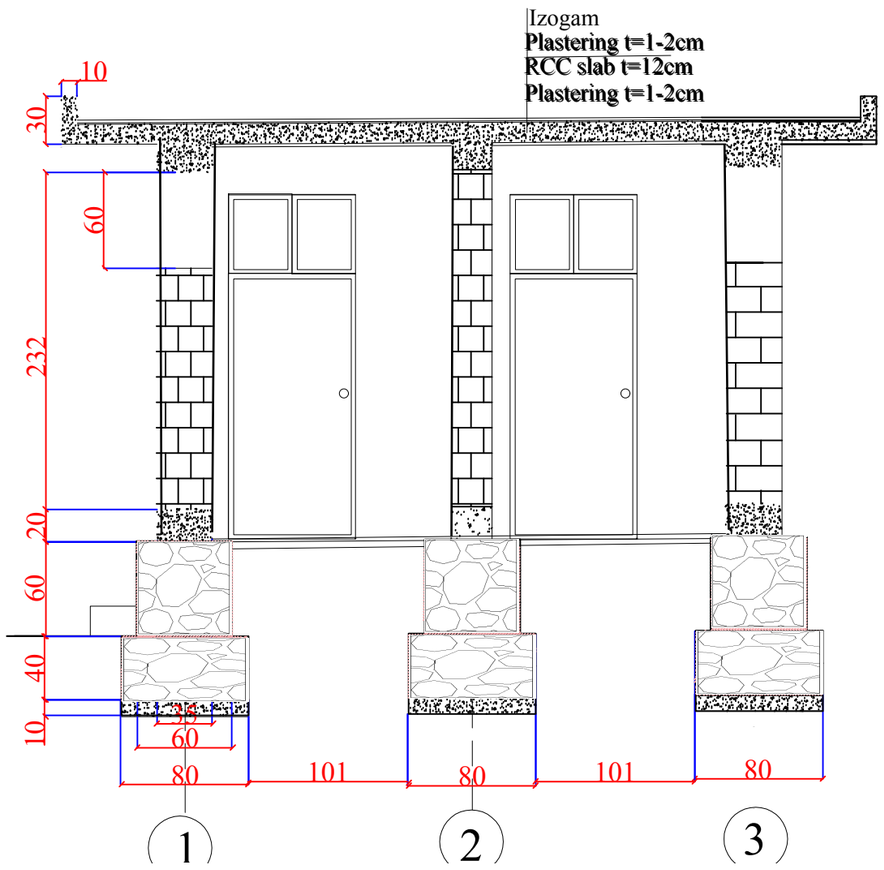

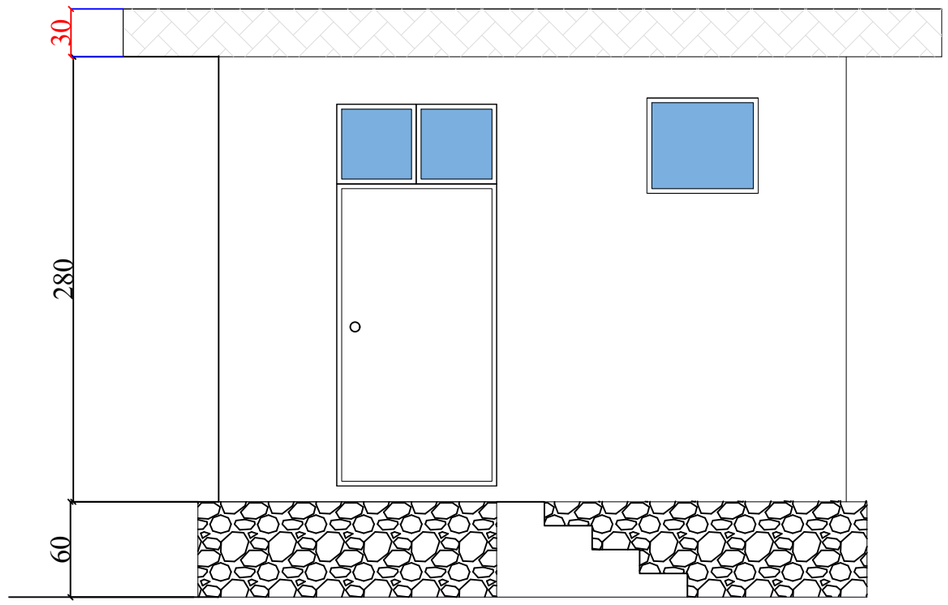

Note:

1-All dimension are in centimeters .
2-PCC shall be (1:2:4).
3-Mortar for stone masonry shall be (1:4).
4-Mortar for Brick masonry shall be (1:3).
5-RCC shall be (1:1,5:3).
6-All steel bars should be not eroded or lubricated and has to be clean.
7-All steel bars should be Class(A1) Ra= 2100 Kg/cm² .
8-The curing must be not less than (28) days.

UNHCR Afghanistan	Drawing Title	Project code	Helmand – 000 – 000	Sheet#		Drawn By	Designed By	Checked By
Helmand Water Supply Network- Nahr-e- Saraj Mina	Toilets Details	Project Name	Water Supply Network	25	Name	Eng Amir	Eng Amir	
		Project Location	Lashkargah City, Helmand Province		Sign			
					Date			

Solar Panels Frame

#171Panels

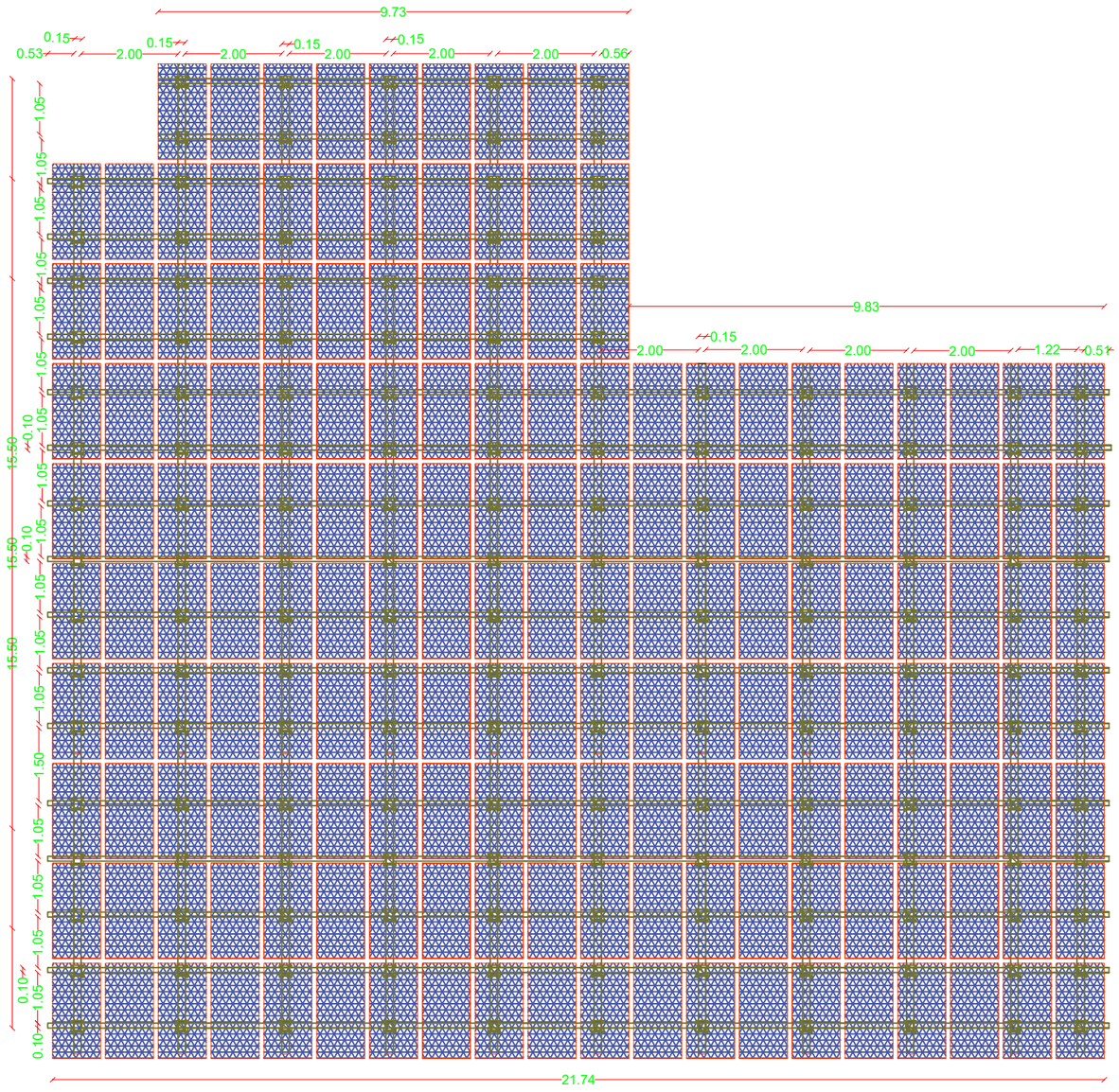

Front Veiw

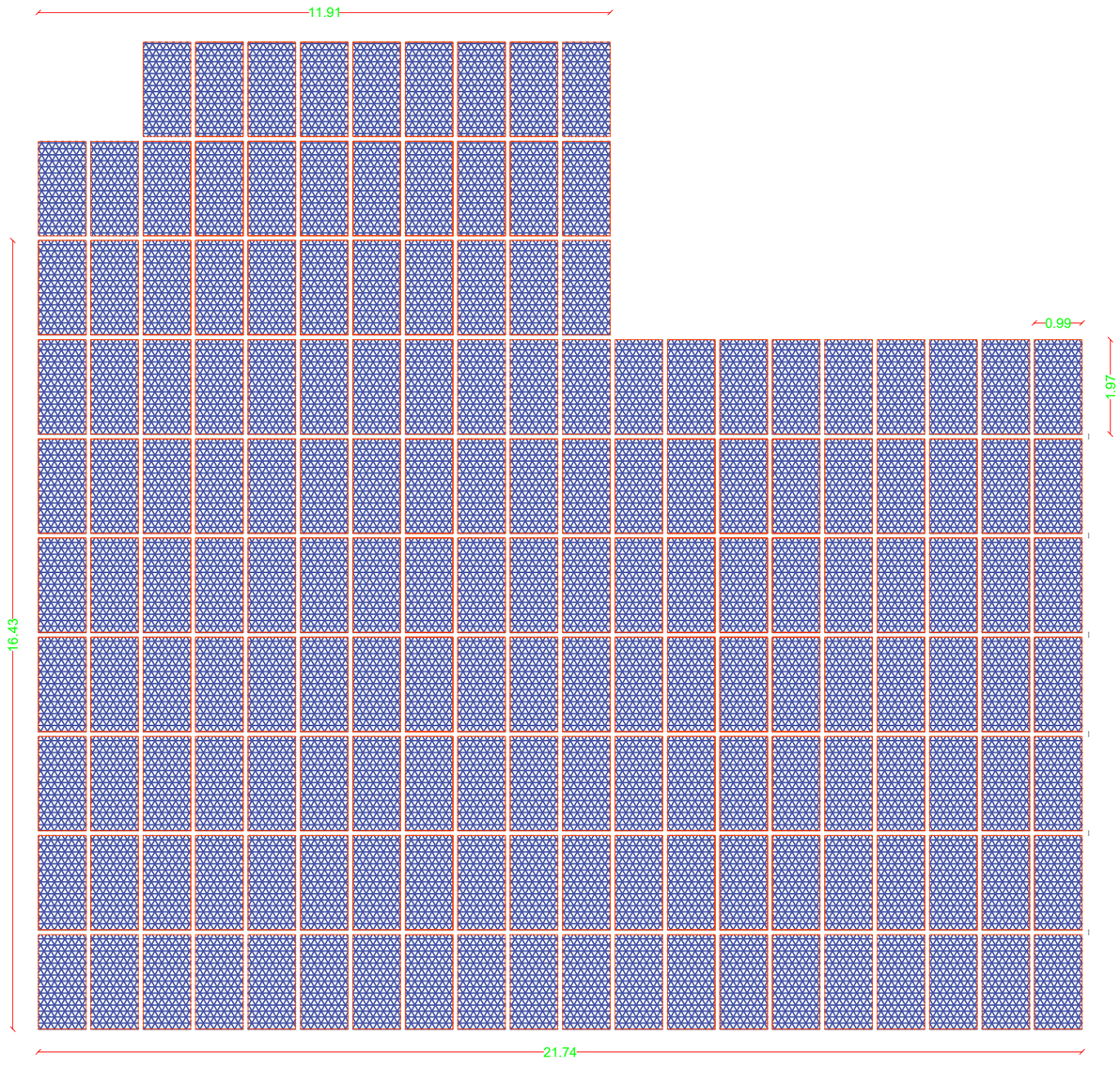

Top Veiw

UNHCR Afghanistan	Drawing Title	Project code	Helmand - 000 - 000	Sheet #		Drawn By	Designed By	Checked By
Helmand Water Supply Network- Bolan	Solar Panels Frame	Project Name	Water Supply Network	26	Name	Eng Mohauiddin	Eng Mohauiddin	
		Project Location	Lashkargah City, Helmand Province		Sign			
					Date			

Solar Panels Frame

S 1:100

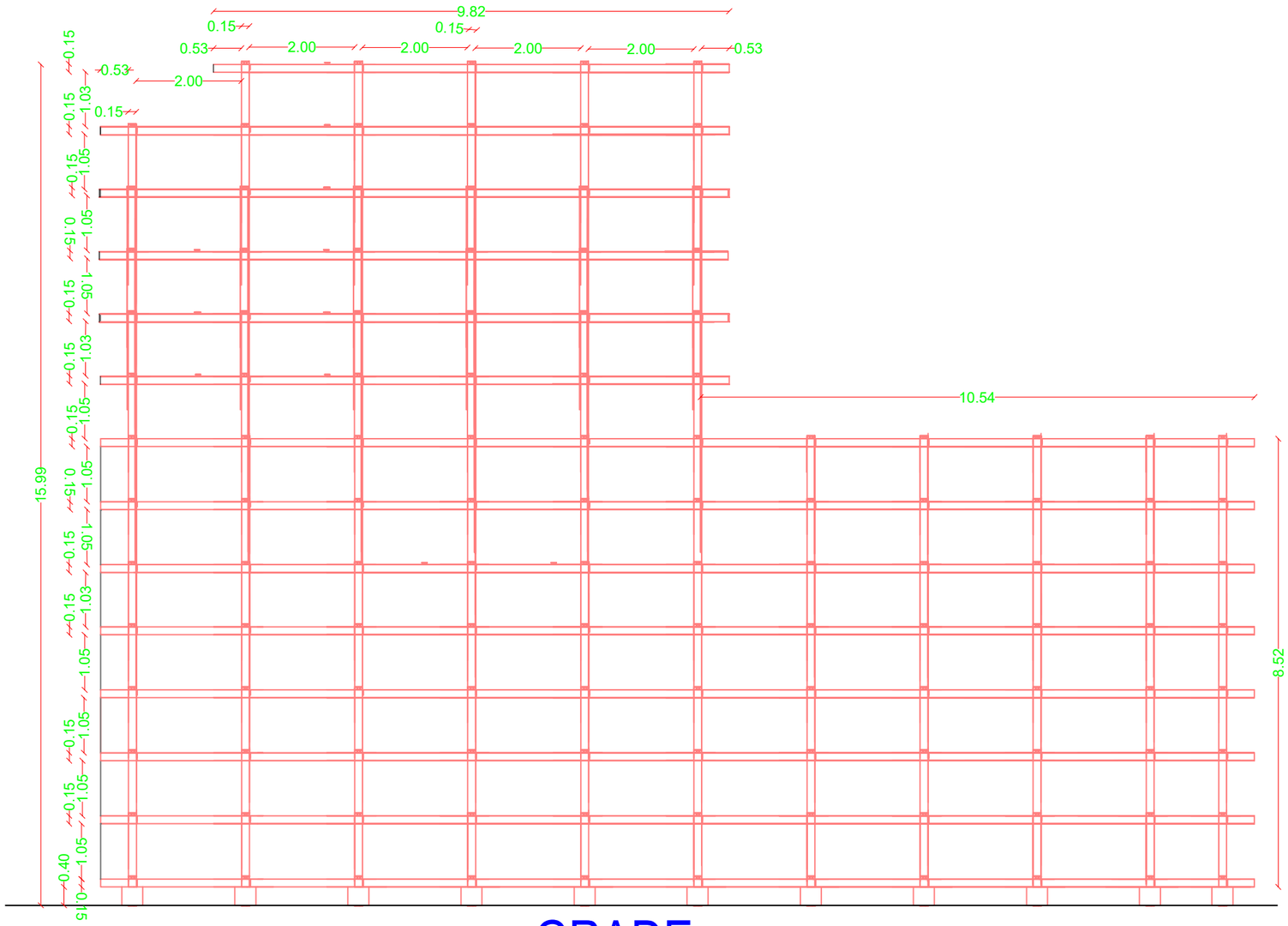

UNHCR Afghanistan	Drawing Title	Project code	Helmand - 000 - 000	Sheet #		Drawn By	Designed By	Checked By
Helmand Water Supply Network- Bolan	Solar Panels Frame	Project Name	Water Supply Network	27	Name	Eng Mohauiddin	Eng Mohauiddin	
		Project Location	Lashkargah City, Helmand Province		Sign			
					Date			

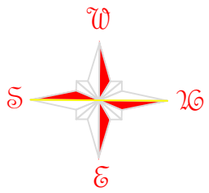

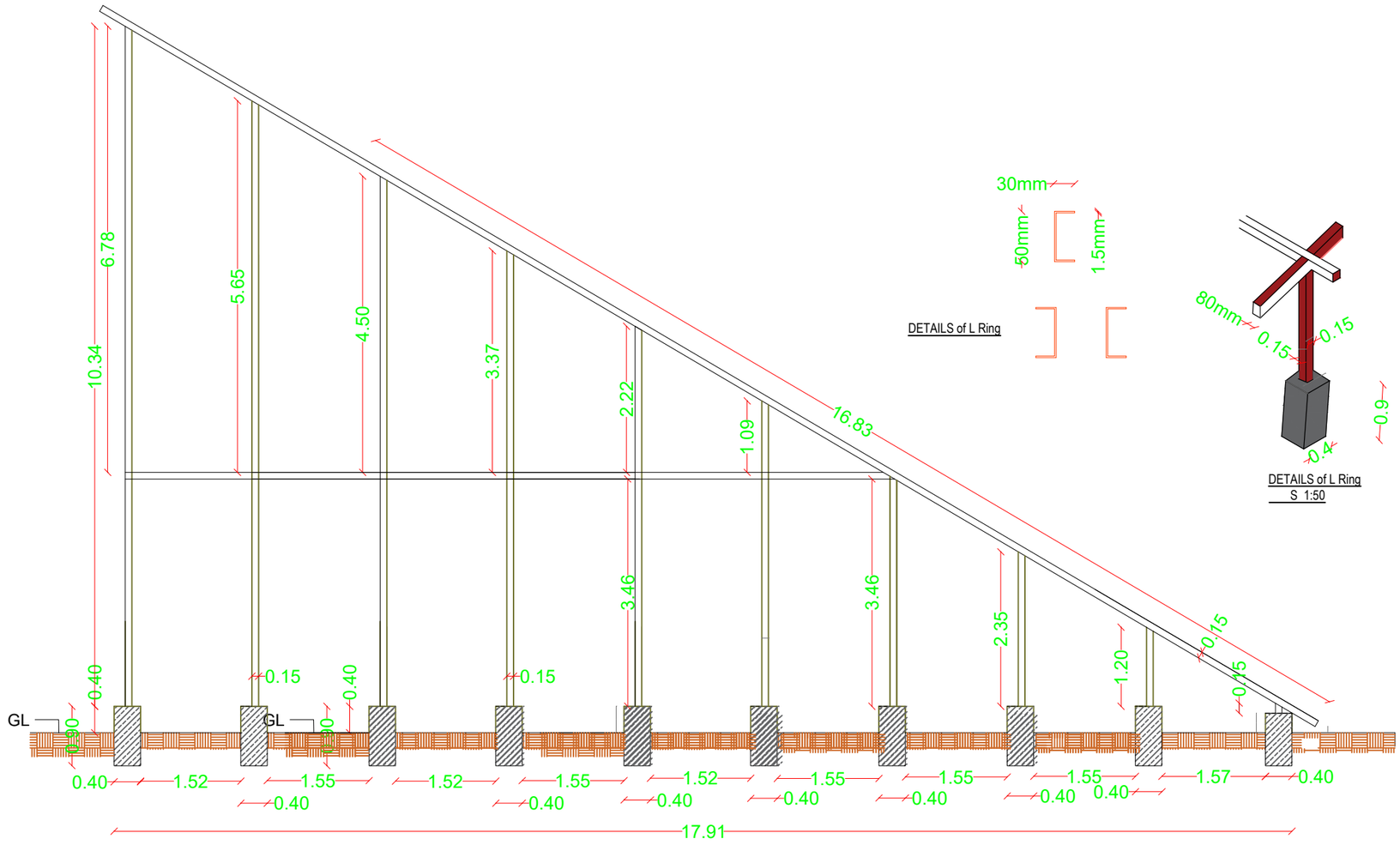

Section (1:100)

UNHCR Afghanistan	Drawing Title	Project code	Helmand - 000 - 000	Sheet #		Drawn By	Designed By	Checked By
Helmand Water Supply Network- Bolan	Solar Panels Frame	Project Name	Water Supply Network	28	Name	Eng Mohauiddin	Eng Mohauiddin	
		Project Location	Lashkargah City, Helmand Province		Sign			
					Date			

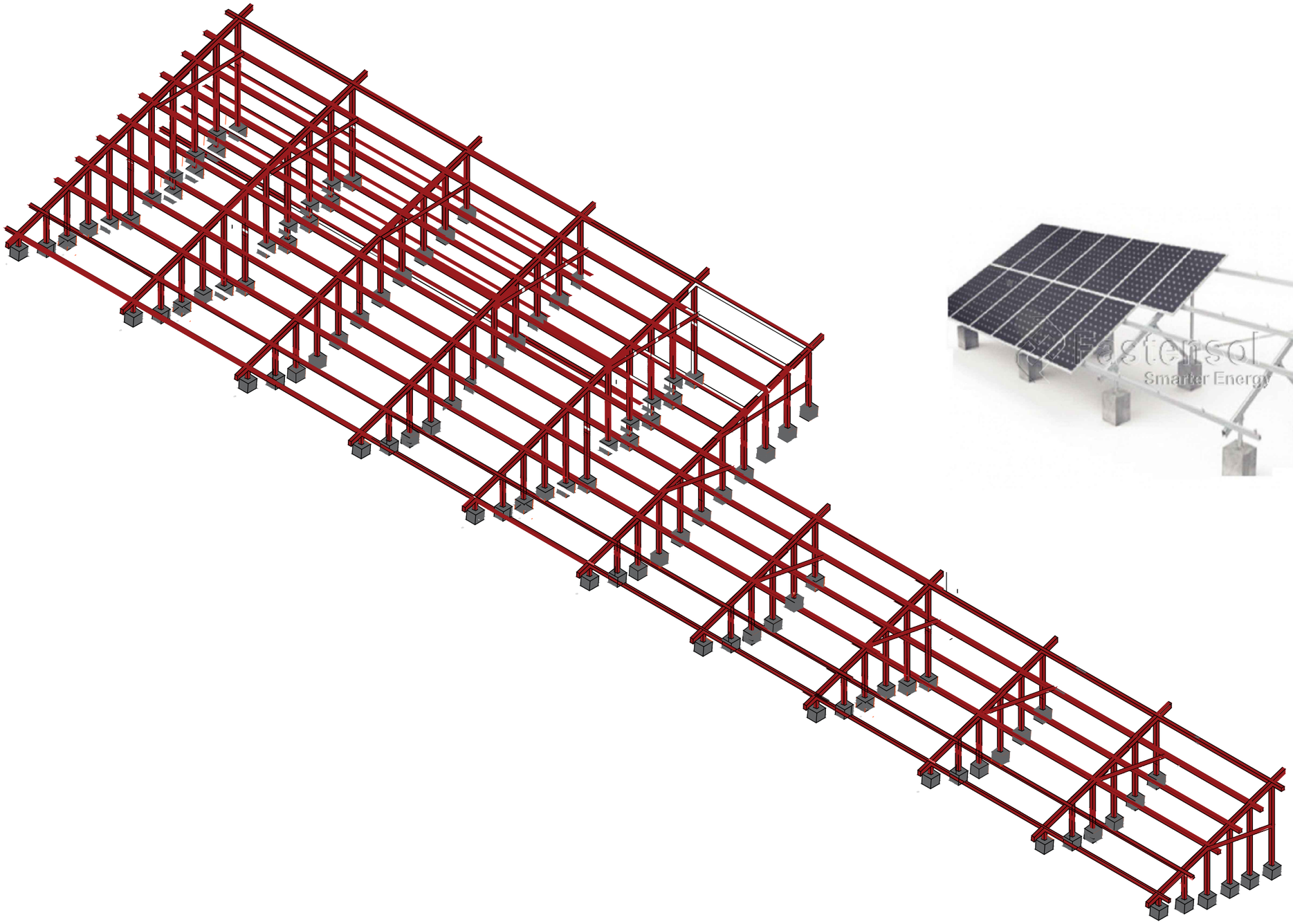

UNHCR Afghanistan	Drawing Title	Project code	Helmand - 000 - 000	Sheet #		Drawn By	Designed By	Checked By
		Project Name	Water Supply Network	29	Name	Eng Mohauiddin	Eng Mohauiddin	
Helmand Water Supply Network- Bolan	Solar Panels Frame	Project Location	Lashkargah City, Helmand Province		Sign			
					Date			

Deep Well Design by Compressor machine in Water supply Network project

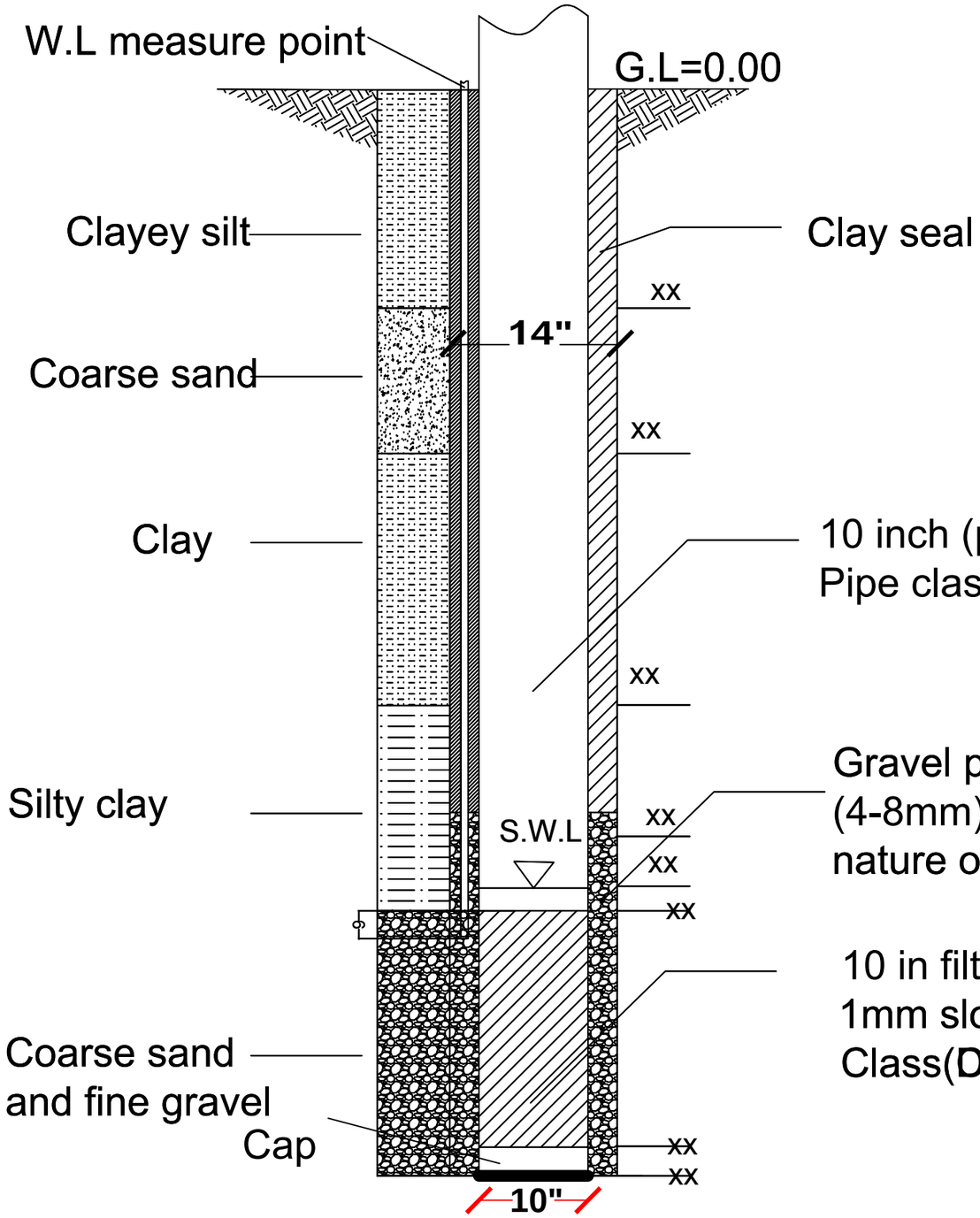

Approximately
well discharge
10cu.m/hour

UNHCR Afghanistan	Drawing Title	Project code	Helmand – 000 – 000	Sheet#		Drawn By	Designed By	Checked By
Helmand Water Supply Network- Bolan	Borewell Section	Project Name	Water Supply Network	30	Name	Eng Amir	Eng Amir	
		Project Location	Lashkargah City, Helmand Province		Sign			
					Date			