UNHCR The UN Refugee Agency | Afghanistan

زنان برای زنان افغان
ښځې د افغان ښځو لپاره
WOMEN FOR AFGHAN WOMEN

MINISTRY OF PUBLIC HEALTH

Department of Construction / Technical Services

Documents

Khwaja Karim BHC

Location:

Khwaja Karim Village, Nimruz Province

ARCHITECTURE & ENGINEERING DESIGN

10.OCT.2022

Nimruz Khwaja Karim BHC Site Plan including Total Covered Area, Boundary wall Length, Approved Sketch and Site Picture

S 1:100

Total Covered Area = 6000 S.qm = 3 Jerb

Total Boundary Wall Length = 353 M

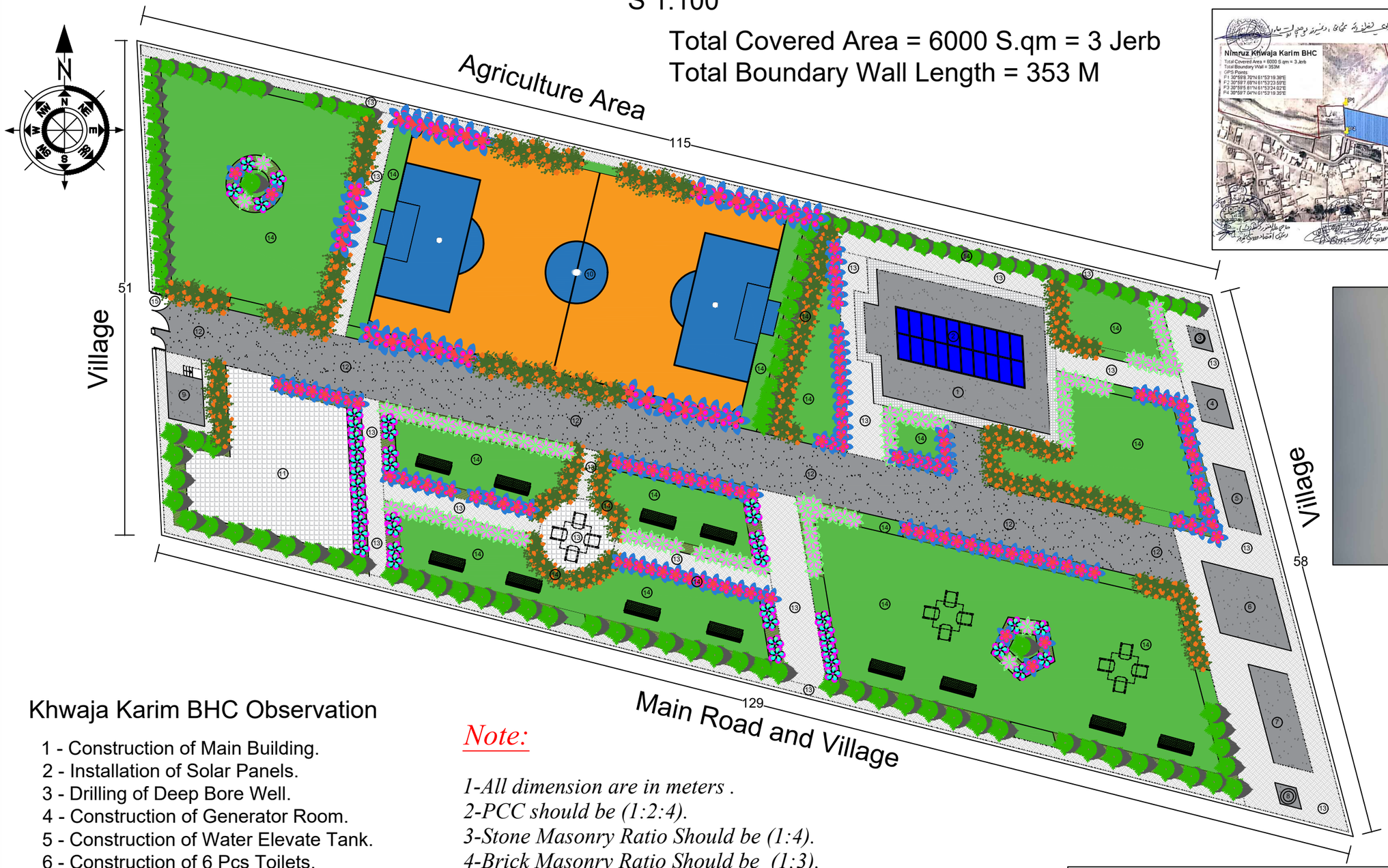

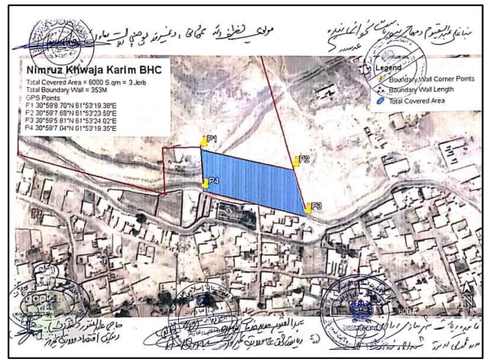

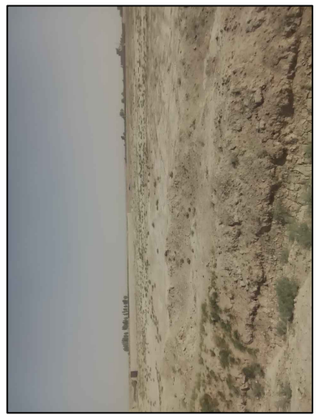

Khwaja Karim BHC Observation

1 - Construction of Main Building.
2 - Installation of Solar Panels.
3 - Drilling of Deep Bore Well.
4 - Construction of Generator Room.
5 - Construction of Water Elevate Tank.
6 - Construction of 6 Pcs Toilets.
7 - Construction of Septic Tank.
8 - Construction of Garbage Collection Point.
9 - Construction of Guard Room.
10 - Construction of Futsal Play Ground.
11 - Construction of Parking.
12 - Construction of Car Way.
13 - Construction of Side Walk and Walk Way.
14 - Construction of Green Area.
15 - Installation of Small and Main Steel Gates

Note:

1-All dimension are in meters .
2-PCC should be (1:2:4).
3-Stone Masonry Ratio Should be (1:4).
4-Brick Masonry Ratio Should be (1:3).
5-RCC Concrete Ratio Should be (1:1,5:3).
6-All Reinforcements steel bars should not be eroded or lubricated and has to be clean.
7-All steel bars should be Class A .
8- All steel bars should be Grade 60.
9-The Curing of RCC Concrete should not be less then (28) days.

UNHCR The UN Refugee Agency | Afghanistan

Health Construction Project

Project code	Nimruz- 000 - 000
Project	New Constructions of Khwaja Karim CHC
Drawing Title	Khwaja Karim CHC Sketch
Project Location	Zaranj, Nimruz Province Afghanistan

	Drawn By:	Designed By:	Checked By:	
Name	Engr. I Danish	Engr. I Danish	Engr. Amir M	
Sign				
Date				

Nimruz Khwaja Karim BHC Site Plan including Total Covered Area, Boundary wall Length, Electrical, Plumbing and Sewer Line System

S 1:100

Total Covered Area = 6000 S.qm = 3 Jerb

Total Boundary Wall Length = 353 M

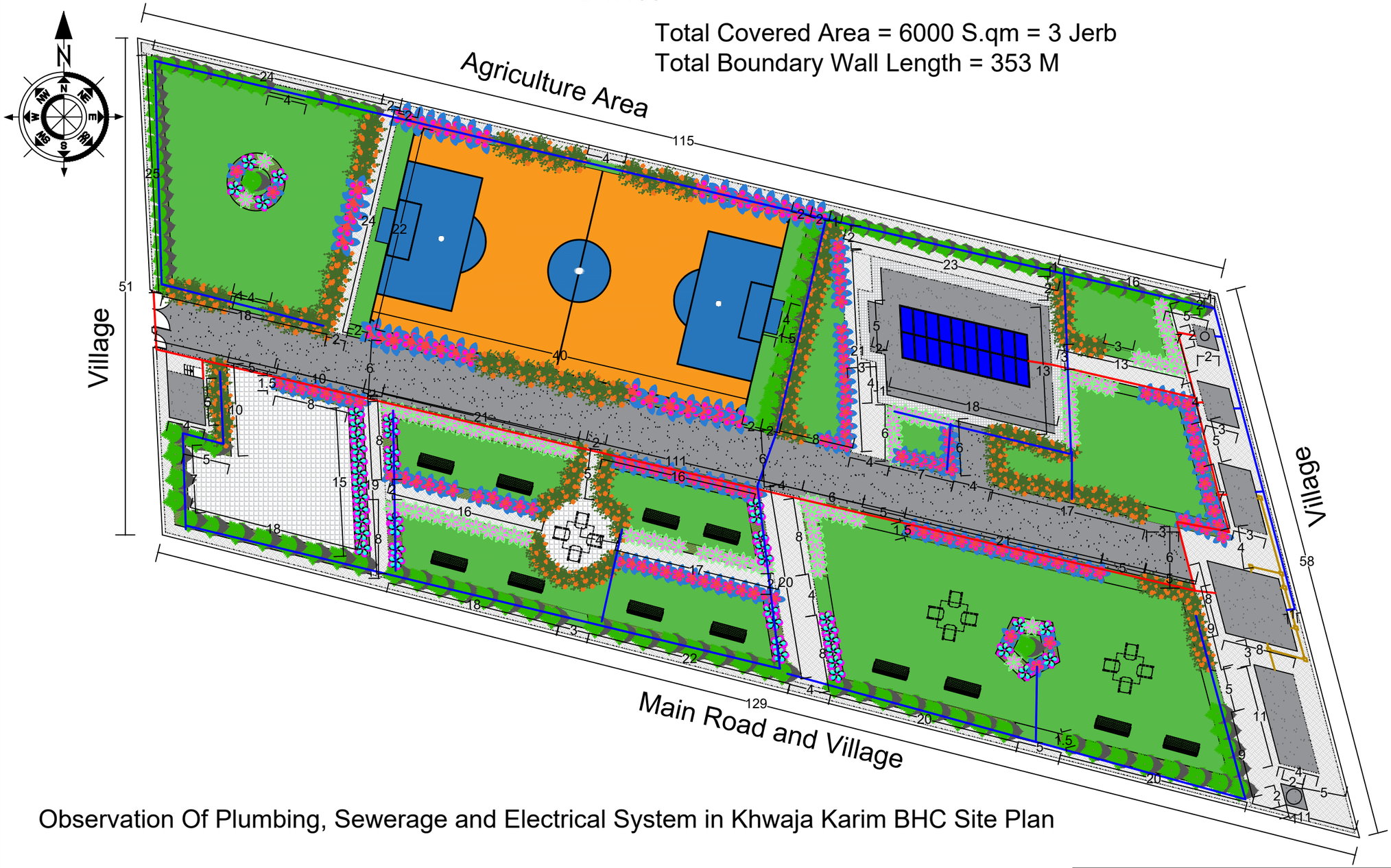

Observation Of Plumbing, Sewerage and Electrical System in Khwaja Karim BHC Site Plan

1 ____ The Red Colors Line Shows the Electrical System From Generator Room to Main Building or 0ther Portions.
Total electrical conduit pipe length 185 M

2 ____ The Green Colors Line Shows the Plumbing System From Bore well to Water Elevate Tank and Other Portions.
Total plumbing pipe length 450 M

3 ____ The Grey Colors Line Shows the Sewerage System From 6Pcs Toilets to Septic Tank.
Total Sewerage pipe length 30 M

UNHCR The UN Refugee Agency | Afghanistan

Health Construction Project

Project code	Nimruz- 000 - 000
Project	New Constructions of Khwaja Karim BHC Including Wash and Other Facilities
Drawing Title	Khwaja Karim BHC Site Plan
Project Location	Zaranj, Nimruz Province Afghanistan

	Drawn By:	Designed By:	Checked By:	
Name	Engr. I Danish	Engr. I Danish	Engr. Amir M	
Sign				
Date				

Nimruz Khwaja Karim BHC Car Way, Side Walk and Walk Way Sections With Details

S 1:100

Plan of Side Walk and Walk Way

Plan of Car Way

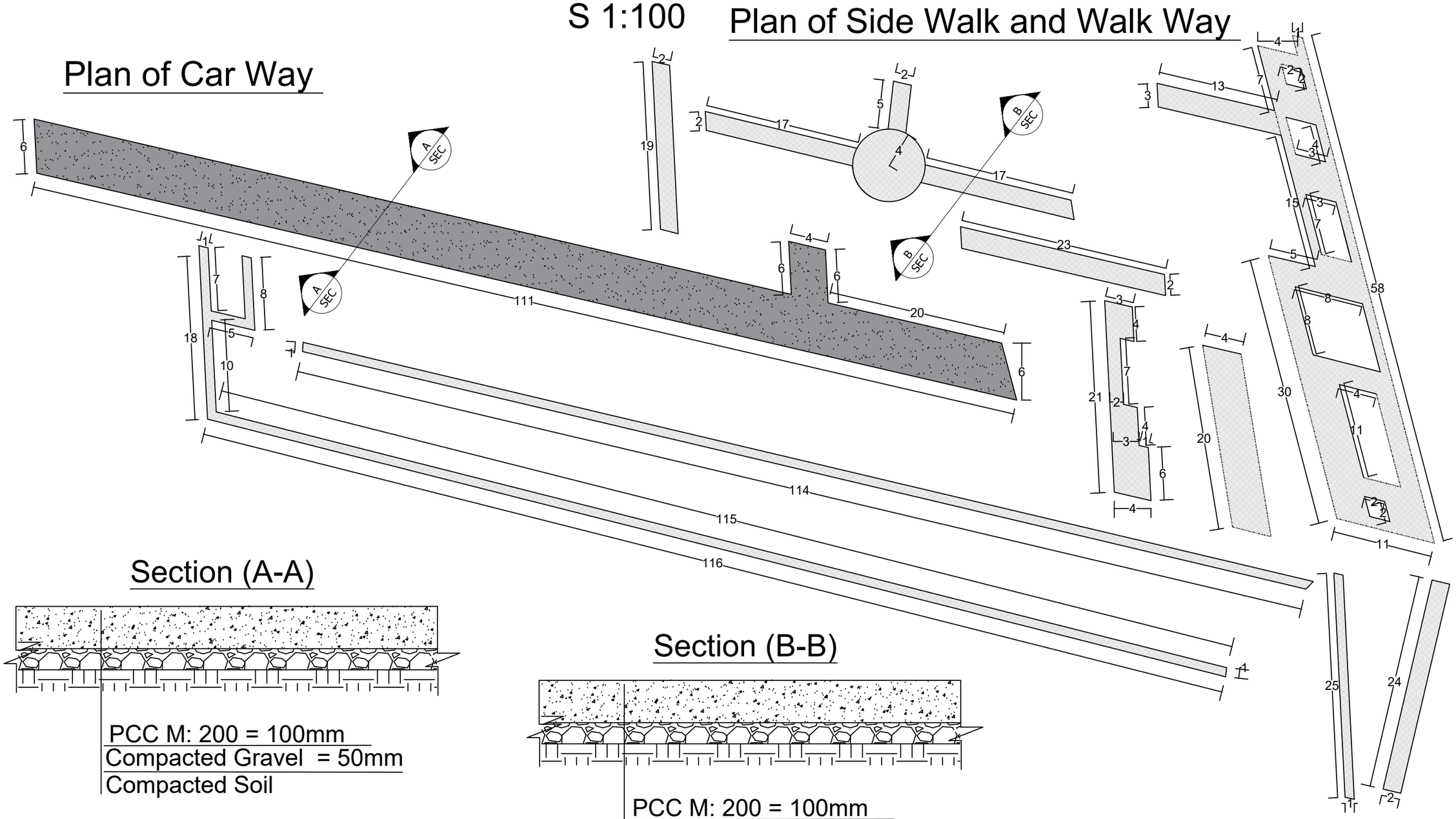

Section (A-A)

PCC M: 200 = 100mm
Compacted Gravel = 50mm
Compacted Soil

Total Area = 675 Sq.m
Total site leveling = 657 Sq. m
Total PCC = 65.7 Cu. m
Total Graveling = 32.85 Cu. m

Section (B-B)

PCC M: 200 = 100mm
Compacted Gravel = 50mm
Compacted Soil

Total Area = 1015 Sq.m
Total site leveling = 1015 Sq. m
Total PCC = 101.5 Cu. m
Total Graveling = 50.75 Cu. m

UNHCR The UN Refugee Agency | Afghanistan

Health Construction Project

Project code	Nimruz- 000 - 000
Project	New Constructions of Khwaja Karim BHC Including Wash and Other Facilities
Drawing Title	Khwaja Karim BHC Car Way, Side Walk and Walk Way Sections with Details
Project Location	Zaranj, Nimruz Province Afghanistan

	Drawn By:	Designed By:	Checked By:	
Name	Engr. I Danish	Engr. I Danish	Engr. Amir M	
Sign				
Date				

Nimruz Khwaja Karim BHC Green Area Sections With Details
S 1:100

Plan of Green Area

Section (C-C)

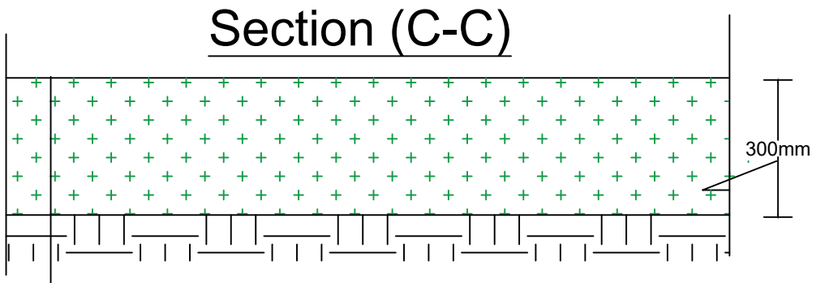

Planted Turf Seed/Grass or Trees/Flowers
Agriculture Soil Thickness = 300mm
Excavation Thickness = 300mm
Compacted Soil

Total Area = 2720 Sq. m

Total Excavation = 816 Cu. m

Total Agriculture soil = 816 Cu.m

Total seed = 55.35 Kg/Sq. m

Total Trees and Flowers = 200 N

UNHCR The UN Refugee Agency | Afghanistan

Health Construction Project

Project code	Nimruz- 000 - 000
Project	New Constructions of Khwaja Karim BHC Including Wash and Other Facilities
Drawing Title	Khwaja Karim BHC Green Area Sections With Details
Project Location	Zaranj, Nimruz Province Afghanistan

	Drawn By:	Designed By:	Checked By:	
Name	Engr. I Danish	Engr. I Danish	Engr. Amir M	
Sign				
Date				

Nimruz Khwaja Karim BHC Futsal Play Ground and Parking Sections With Details
S 1:100

Plan of Futsal Play Ground

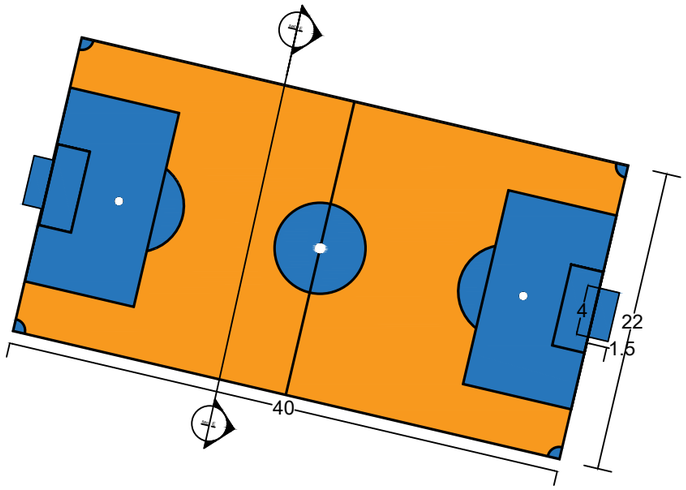

Section (E-E)

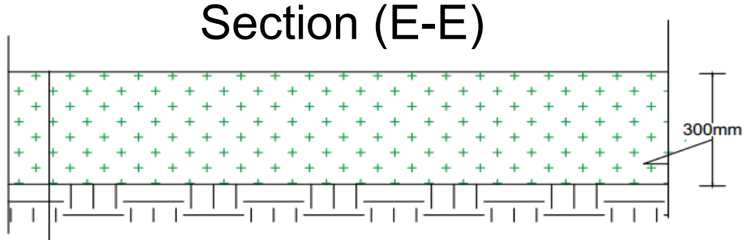

Planted Turf Seed/Grass
Agriculture Soil Thickness = 300mm
Excavation Thickness = 300mm
Compacted Soil

Total Area = 892 Sq. m
Total excavation = 267.6 Cu.m
Total Placing Agriculture Soils = 267.6 Cu. m
Total Seed = 892 Kg/Sq.m

Plan of Parking

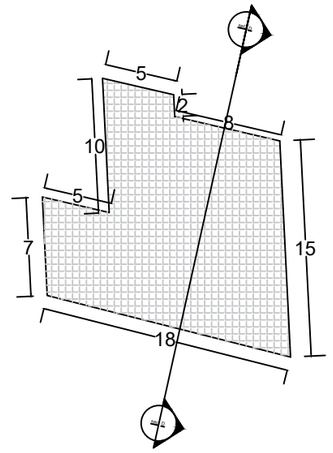

Section (D-D)

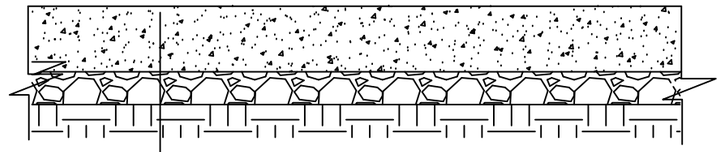

PCC M: 200 = 100mm
Compacted Gravel = 50mm
Compacted Soil

Total Area = 230 Sq. m
Total site leveling = 230 Sq. m
Total PCC = 23 Cu. m
Total Graveling = 11.5 Cu. m

UNHCR The UN Refugee Agency | Afghanistan — Health Construction Project

Project code	Nimruz- 000 - 000
Project	New Constructions of Khwaja Karim BHC Including Wash and Other Facilities
Drawing Title	Khwaja Karim BHC Futsal Play Ground and Parking Section with Details
Project Location	Zaranj, Nimruz Province Afghanistan

	Drawn By:	Designed By:	Checked By:	
Name	Engr. I Danish	Engr. I Danish	Engr. Amir M	
Sign				
Date				

ALL DRAWINGS FOR CONSTRUCTION

BASIC HEALTH CLINICS WITH THERMAL INSULATION

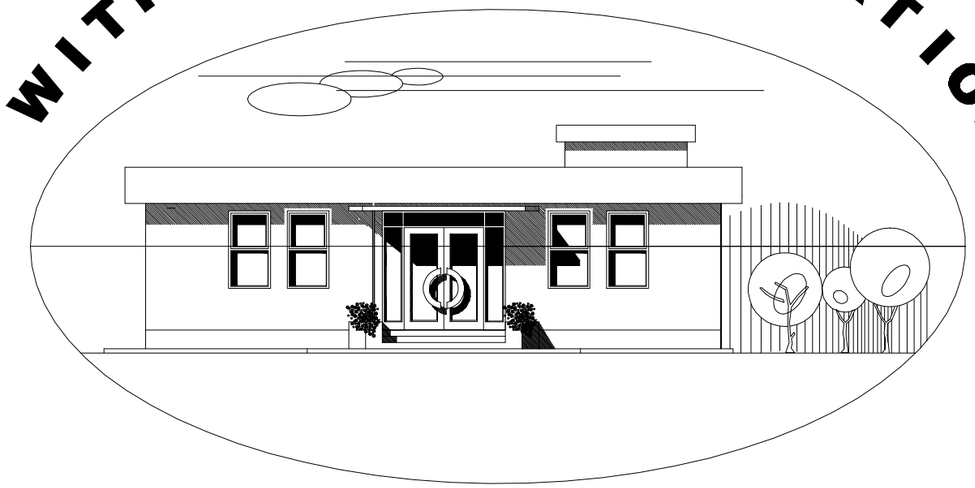

(ON BASIS OF INTERNATIONAL ORGANIZATION FOR MIGRATION DESIGN)

(IOM)

BaCEAG CONSULTATIVE ENGINEERING
& ARCHITECTURAL GROUP

KABUL AFGHANISTAN

CLIENT

MINISTRY OF PUBLIC HEALTH
ISLAMIC REPUBLIC OF AFGHANISTAN

CAD FILE		**BASIC HEALTH CLINIC (BHC)**	REVISIONS						INITL	SIG.	DATE	**BASIC HEALTH CLINIC (BHC) KABUL - AFGHANISTAN**
SCALE	**NTS**		NO.	REVISION	NAME	INITL.	DATE	PRODUCED BY	BaCEAG		July-2008	
DRAWING NUMBER	**BHC.000**							DESIGNED BY	Ar.M.Saber		July-2008	
PROJECT NUMBER		**COVER SHEET**						CHECKED BY	Eng.A.Karim		July-2008	
								APPROVALS				
								PROJECT MANAGER				
								PROJECT DIRECTOR				

ARCHITECT

BaCEAG
CONSULTATIVE ENGINEERING & ARCHITECTURAL GROUP

Email: baceag@yahoo.com
Mobile: 0799 335 606 , 0799 304 476

CLIENT

MINISTRY OF PUBLIC HEALTH

AFGHANISTAN

RECIPIENT

BHC BUILDING , LIST OF DRAWINGS

ARCHITECTURAL DRAWINGS

NO	DWG. #	DWG. NAME	SCALE	REMARKS
1	BHC.AR-000	LIST OF DRAWINGS	NTS	
2	BHC.AR-001	GROUND FLOOR PLAN	1 : 100	
3	BHC.AR-002	DOORS AND WINDOWS PLAN	1 : 100	
4	BHC.AR-003	ROOF PLAN	1 : 100	
5	BHC.AR-004	FRONT ELEVATION	1 : 50	
6	CHC.AR-005	SIDE ELEVATION	1 : 75	
7	BHC.AR-006	SECTION - A : A	1 : 75	
8	BHC.AR-007	SECTION - B : B	1 : 75	
9	BHC.AR-008	DETAILS	1: 50 1: 40 1: 30	
10	BHC.AR-009	WALL SECTION	1: 25	
11	BHC.AR-010	DOOR & WINDOWS DETAILS - 1	1:35	
12	BHC.AR-011	DOOR & WINDOWS DETAILS - 2	1:35	
13	BHC.AR-012	DETAIL FOR CONNECTION OF PROTECTION WALL	1:25	
		BHC GUARD ROOM		
14	BHC.AR-012A	GUARD ROOM FLOOR PLAN	1:50	
15	BHC.AR-013	GUARD ROOM ELEVATION	1:25	
		GENERATOR ROOM		
16	BHC.AR-014	GENERATOR ROOM	1:40	
17	BHC.AR-015	GENERATOR ROOM SECTOIN & ELEVATION	1:40 1:25 1:50	
		LATRINE		
18	BHC.AR-016	LATRINE PLAN & ELEVATION	1:50	
19	BHC.AR-017	LATRINE SECTION	1:40 1:25	
20	BHC.AR-018	LATRINE DOOR & WINDOWS SCHEDULE	1:50	
21		Canceled		
22	BHC.AR-020	MAIN GATE ELEVATION	1:30	
23	BHC.AR-021	GATE PLAN	1:20	
24	BHC.AR-022	BOUNDARY WALL JOINT PLAN & SECTION	1:10 1:15	
25	BHC.AR-023	BOUNDARY WALL ELEVATION	1:30	

STRUCTURE DRAWINGS

NO	DWG. #	DWG. NAME	SCALE	REMARKS
26	BHC.ST-001	GENERAL NOTES	NTS	
27	BHC.ST-002	FOUNDATION PLAN	1 : 75	
28	BHC.ST-003	SECTION FOR WALL FOUNDATION	1 : 25	
34	BHC.ST-004	SLAB FORM WORK PLAN	1 : 75	
35	BHC.ST-005	SLAB REINFORCEMENT PLAN	1 : 75	
36	BHC.ST-006	SLAB STEEL BARS & DETAIL - Y	1 : 50,1:25	
37	BHC.ST-007	COLUMNS AND FOOTING	1 : 50,1:20	
38	BHC.ST-008	FRAME # 1	1 : 50	
39	BHC.ST-009	SECTIONS FOR FRAME # 1	1:25	
40	BHC.ST-010	FRAME # 2	1:50	
41	BHC.ST-011	SECTIONS FOR FRAME # 2	1:25	
42	BHC.ST-012	FRAME # 3 & SECTIONS	1 : 50,1:25	
43	BHC.ST-013	FRAME # 4 & SECTIONS	1 : 50,1:25	
44	BHC.ST-014	WALL CONNECTION DETAILS	1 : 20	
45	BHC.ST-015	STEEL BARS SCHEDULE	NTS	
46	BHC.ST-016	STEEL BARS SCHEDULE	NTS	
		BHC GUARD ROOM		
47	BHC.ST-017	GUARD ROOM FOUNDATION PLAN	1 : 75 ,1:25	
48	BHC.ST-018	GUARD ROOM FORM WORK PLAN	1 : 75 ,1:25	
49	BHC.ST-019	GUARD ROOM SLAB REINFORCEMENT PLAN	1 : 75 ,1:25	
		LATRINE		
50	BHC.ST-020	LATRINE FORM WORK PLAN	1 : 40,1 : 25	
51	BHC.ST-021	LATRINE SECTION FOR WALL & FOUNDATION PLAN	1 : 25	
52	BHC.ST-022	LATRINE SLAB REINFORCEMENT PLAN	1 : 75	
		GENERATOR		
53	BHC.ST-023	GENERATOR FOUNDATION & SLAB REINFORCEMENT PLAN	1 :40, 1:25	

ELECTRICAL DRAWINGS

NO	DWG. #	DWG. NAME	SCALE	REMARKS
54	BHC.EL-001	ELECT LIGHTING PLAN	NTS	
55	BCH.EL-002	FAN INSTALATION PLAN	NTS	
56	BHC.EL-003	POWER PLAN	1 : 75	
57	BHC.EL-004	ELECT. GROUNDING PLAN	1 : 75	
58	BHC.EL-005	CONDUIT & JUNCTION BOX INSTALLATION PLAN	NTS	
59	BCH.EL-006	GUARD ROOM WIRING PLAN	NTS	
60	BCH.EL-007	GENERATOR ROOM LIGHTING PLAN	NTS	
61	BCH.EL-008	GENERATOR ROOM POWER PLAN	NTS	
62	BCH.EL-009	POWER OUT LET INSTALATION & GROUNDING DETAILS	NTS	
63	BCH.EL-010	ELECTRICAL LEGEND & LOAD DISTRIBUTION PLAN	NTS	

MECHNICAL DRAWINGS

NO	DWG. #	DWG. NAME	SCALE	REMARKS
65	BHC.WA-001	GROUND FLOOR COLD WATER SYSTM	1 : 75	
66	BHC.WA-002	DRINAGE SYSTEM PLAN	1 : 75	
67	BHC.WA-003	HOT WATER SYSTEM	1 : 75	

SEPTIC TANK

NO	DWG. #	DWG. NAME	SCALE	REMARKS
68	BHC.WA-004	SEPTIC TANK PLAN & SECTION	1 : 75	
69	BHC.WA-005	WATER TANK	1:40	
70	BHC.WA-006	GROUND FLOOR ISO. SYSTEM SCHEME	1:75	
71	BHC.WA-007	DETAILS	NTS	
72	BHC.WA-008	GROUND FLOOR ISO. WATER SUPPLY SCHEME	NTS	

CAD FILE	
SCALE	NTS
DRAWING NUMBER	BHC.000
PROJECT NUMBER	

BASIC HEALTH CLINIC (BHC)

INDEX SHEET

REVISIONS

NO.	REVISION	NAME	INITL.	DATE

	INITL	SIG.	DATE
PRODUCED BY	BaCEAG		July-2008
DESIGNED BY	Ar.M.Saber		July-2008
CHECKED BY	Eng.A.Karim		July-2008
APPROVALS			
PROJECT MANAGER			
PROJECT DIRECTOR			

BASIC HEALTH CLINIC (BHC)

KABUL - AFGHANISTAN

ARCHITECT

BaCEAG
CONSULTATIVE ENGINEERING & ARCHITECTURAL GROUP

Email: baceag@yahoo.com
Mobile: 0799 335 666 , 0799 304 476

CLIENT

MINISTRY OF PUBLIC HEALTH

AFGHANISTAN

RECIPIENT

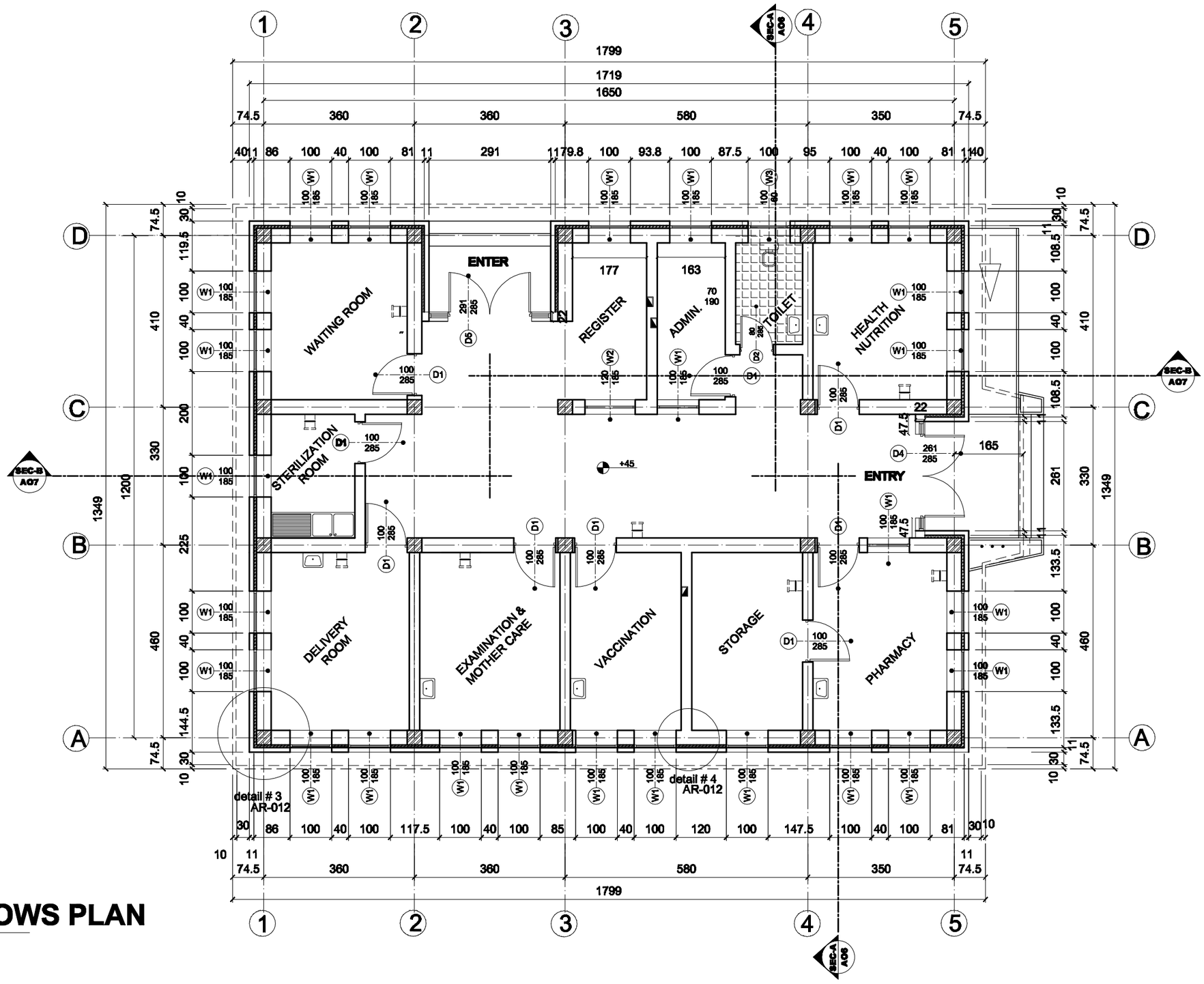

1 DOOR & WINDOWS PLAN
SCALE =1/100

CAD FILE		BASIC HEALTH CLINIC (BHC)	REVISIONS					INITL	SIG.	DATE	BASIC HEALTH CLINIC (BHC) KABUL - AFGHANISTAN
SCALE	1:100		NO.	REVISION	NAME	INITL.	DATE	PRODUCED BY	BaCEAG		July-2008
DRAWING NUMBER	BHC.AR-002							DESIGNED BY	Ar.M.Saber		July-2008
		DOOR & WINDOWS PLAN						CHECKED BY	Eng.A.Karim		July-2008
PROJECT NUMBER								APPROVALS			
								PROJECT MANAGER			
								PROJECT DIRECTOR			

ARCHITECT

BaCEAG
CONSULTATIVE ENGINEERING & ARCHITECTURAL GROUP
Email: baceag@yahoo.com
Mobile: 0799 335 606 , 0799 304 476

CLIENT

MINISTRY OF PUBLIC HEALTH
AFGHANISTAN

RECIPIENT

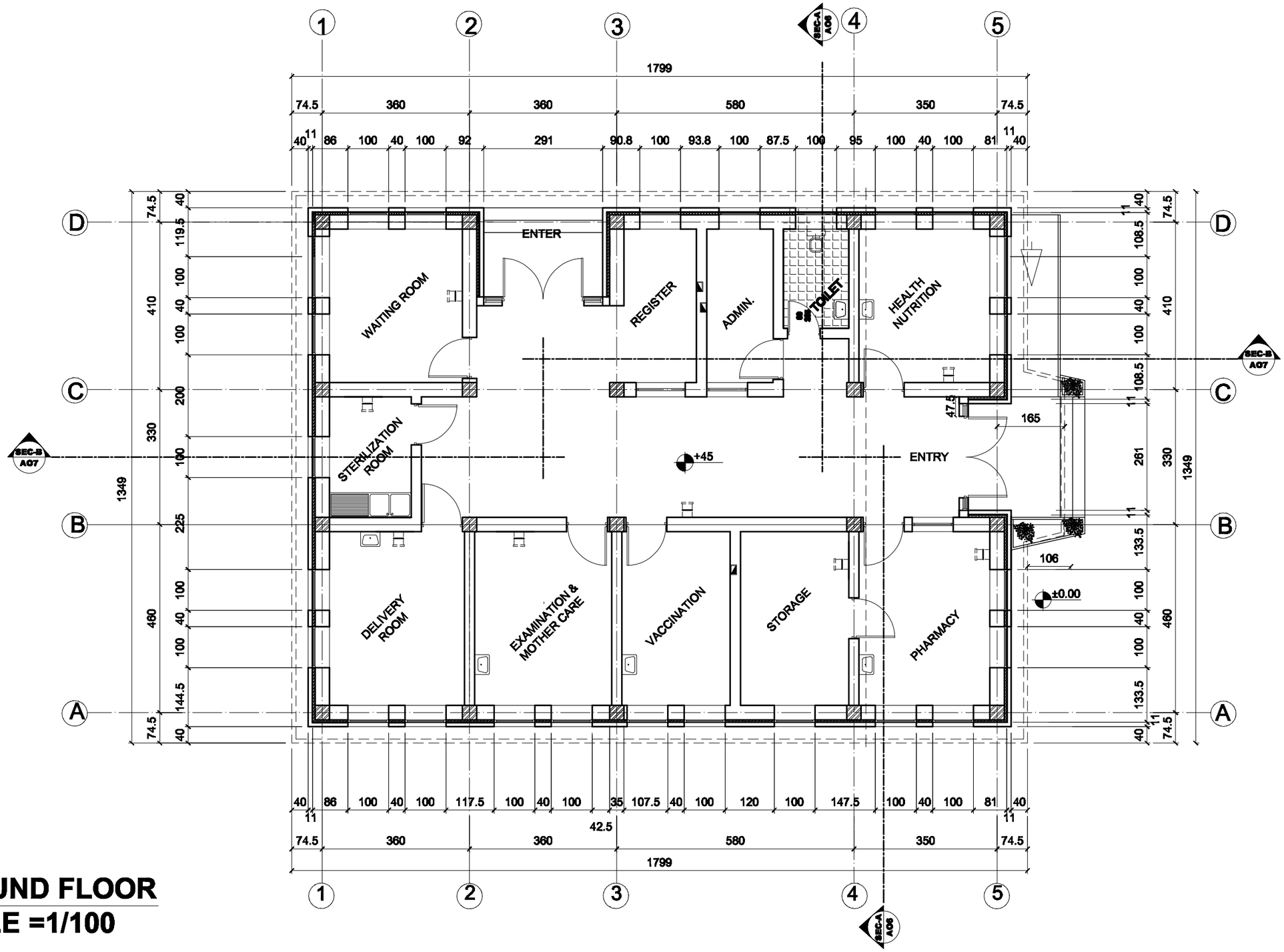

1 GROUND FLOOR
SCALE =1/100

CAD FILE		BASIC HEALTH CLINIC (BHC)	REVISIONS							BASIC HEALTH CLINIC (BHC) KABUL - AFGHANISTAN	ARCHITECT BaCEAG CONSULTATIVE ENGINEERING & ARCHITECTURAL GROUP Email: bacoag@yahoo.com Mobile: 0799 335 666 , 0799 384 476	CLIENT MINISTRY OF PUBLIC HEALTH AFGHANISTAN	RECIPIENT
SCALE	1:100		NO.	REVISION	NAME	INITL.	DATE		INITL	SIG.	DATE				
DRAWING NUMBER	BHC.AR-001	GROUND FLOOR PLAN						PRODUCED BY	BaCEAG		July-2008				
PROJECT NUMBER								DESIGNED BY	Ar.M.Saber		July-2008				
								CHECKED BY	Eng.A.Karim		July-2008				
								APPROVALS							
								PROJECT MANAGER							
								PROJECT DIRECTOR							

Note: Roof truss are not included in the all portions of this project

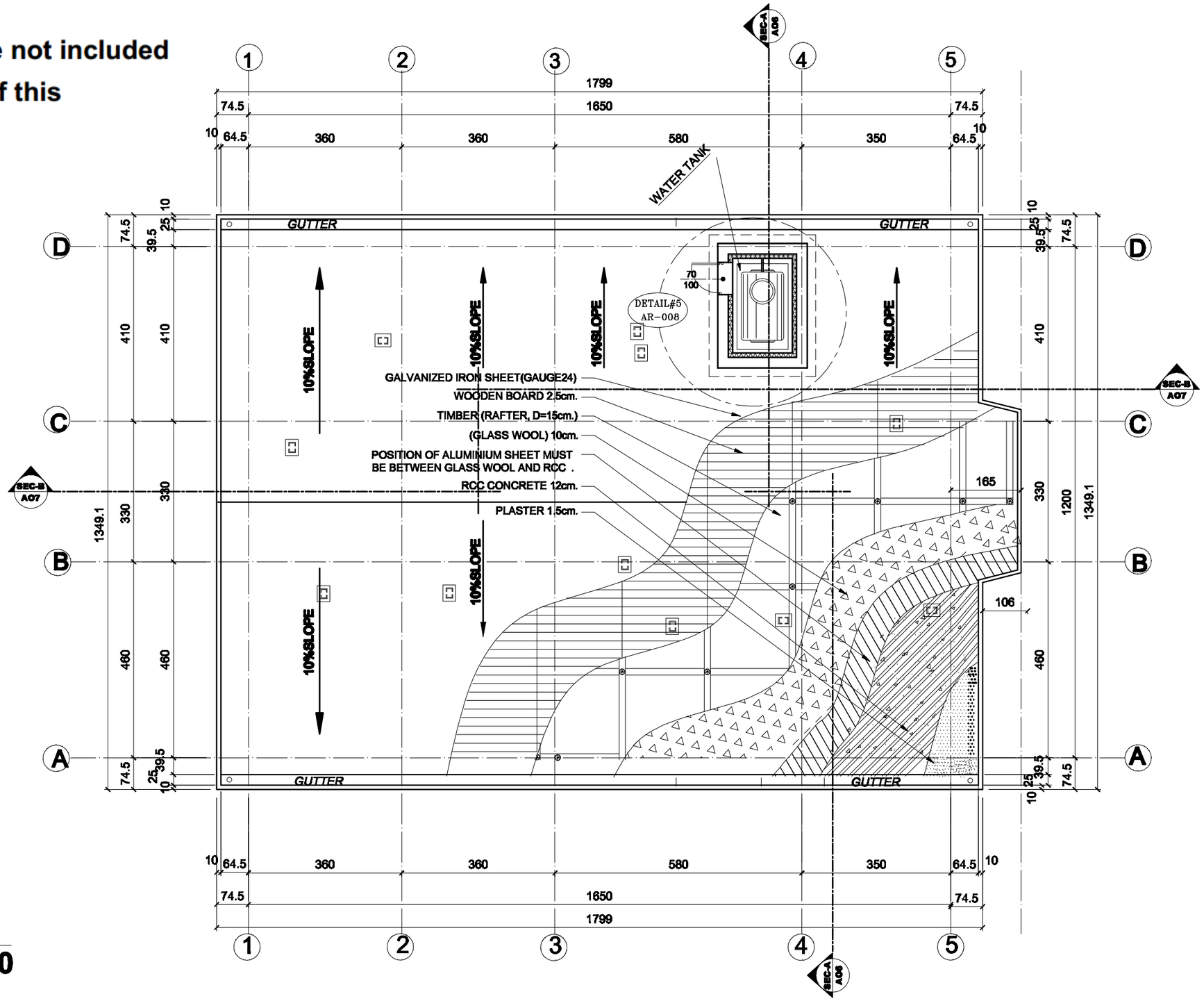

1 ROOF PLAN
SCALE =1/100

CAD FILE		BASIC HEALTH CLINIC (BHC)	REVISIONS						
SCALE	1:100		NO.	REVISION	NAME	INITL.	DATE		
DRAWING NUMBER	BHC.AR-003	ROOF PLAN							
PROJECT NUMBER									

	INITL	SIG.	DATE
PRODUCED BY	BaCEAG		July-2008
DESIGNED BY	Ar.M.Saber		July-2008
CHECKED BY	Eng.A.Karim		July-2008
APPROVALS			
PROJECT MANAGER			
PROJECT DIRECTOR			

BASIC HEALTH CLINIC (BHC) KABUL - AFGHANISTAN

ARCHITECT
BaCEAG
CONSULTATIVE ENGINEERING & ARCHITECTURAL GROUP
Email: bacesg@yahoo.com
Mobile: 0799 335 666 , 0799 304 476

CLIENT
MINISTRY OF PUBLIC HEALTH
AFGHANISTAN

RECIPIENT

1 FRONT ELEVATION
SCALE =1/50

CAD FILE		BASIC HEALTH CLINIC (BHC)	REVISIONS					INITL	SIG.	DATE	BASIC HEALTH CLINIC (BHC) KABUL - AFGHANISTAN	ARCHITECT BaCEAG CONSULTATIVE ENGINEERING & ARCHITECTURAL GROUP Email: baceag@yahoo.com Mobile: 0799 335 666 , 0799 304 476	CLIENT MINISTRY OF PUBLIC HEALTH AFGHANISTAN	RECIPIENT
SCALE	1:50		NO.	REVISION	NAME	INITL.	DATE	PRODUCED BY	BaCEAG		July-2008			
DRAWING NUMBER	BHC.AR-004	FRONT ELEVATION						DESIGNED BY	Ar.M.Saber		July-2008			
PROJECT NUMBER								CHECKED BY	Eng.A.Karim		July-2008			
								APPROVALS						
								PROJECT MANAGER						
								PROJECT DIRECTOR						

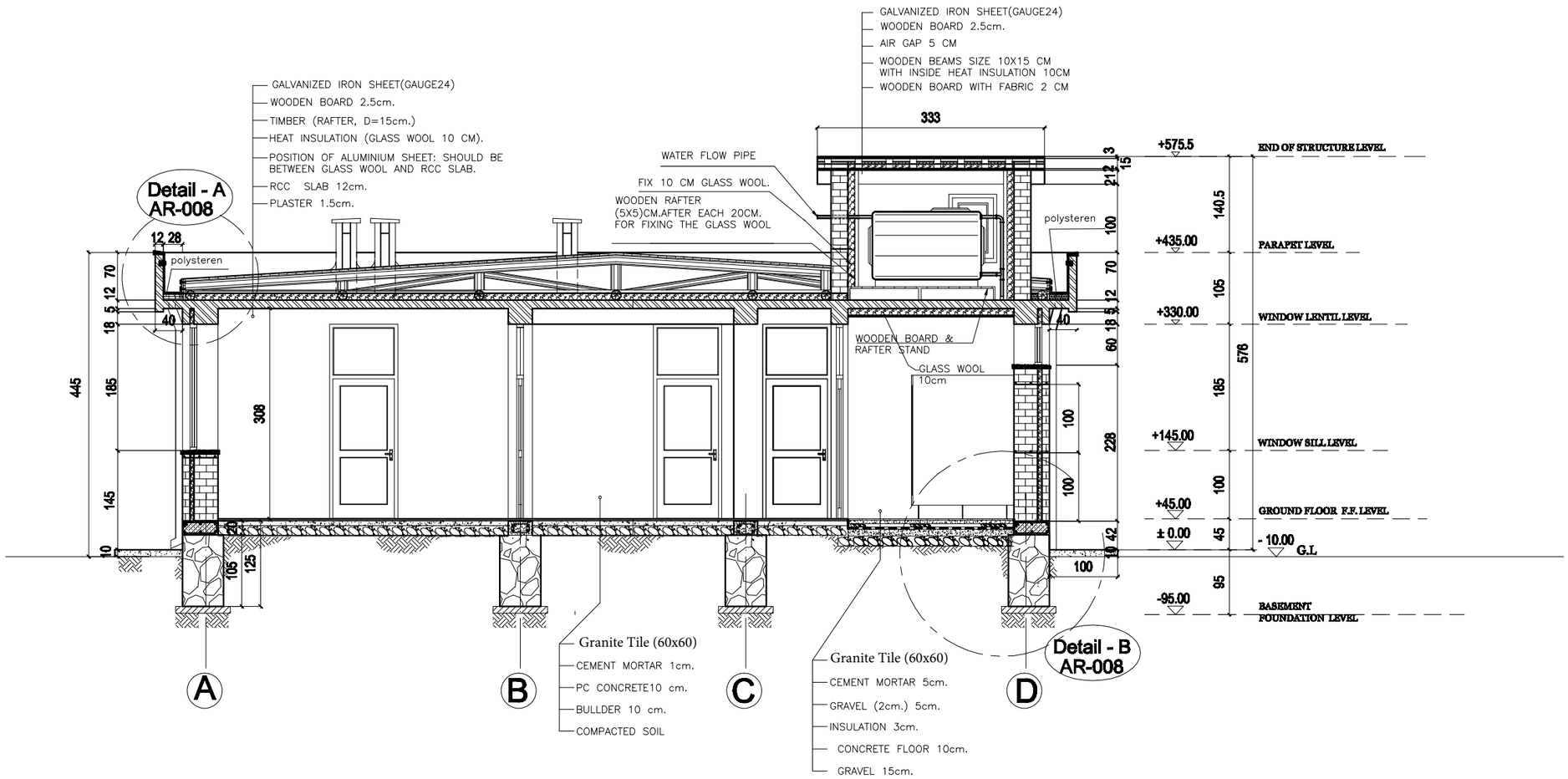

1 SECTION (A-A)
SCALE =1/75

CAD FILE		BASIC HEALTH CLINIC (BHC)	REVISIONS					INITL	SIG.	DATE	BASIC HEALTH CLINIC (BHC) KABUL - AFGHANISTAN	ARCHITECT BaCEAG CONSULTATIVE ENGINEERING & ARCHITECTURAL GROUP Email: baceag@yahoo.com Mobile: 0799 335 666 , 0799 304 476	CLIENT MINISTRY OF PUBLIC HEALTH AFGHANISTAN	RECIPIENT
SCALE	1:75		NO.	REVISION	NAME	INITL.	DATE	PRODUCED BY	BaCEAG		July-2008			
DRAWING NUMBER	BHC.AR-006	SECTION A-A						DESIGNED BY	Ar.M.Saber		July-2008			
PROJECT NUMBER								CHECKED BY	Eng.A.Karim		July-2008			
								APPROVALS						
								PROJECT MANAGER						
								PROJECT DIRECTOR						

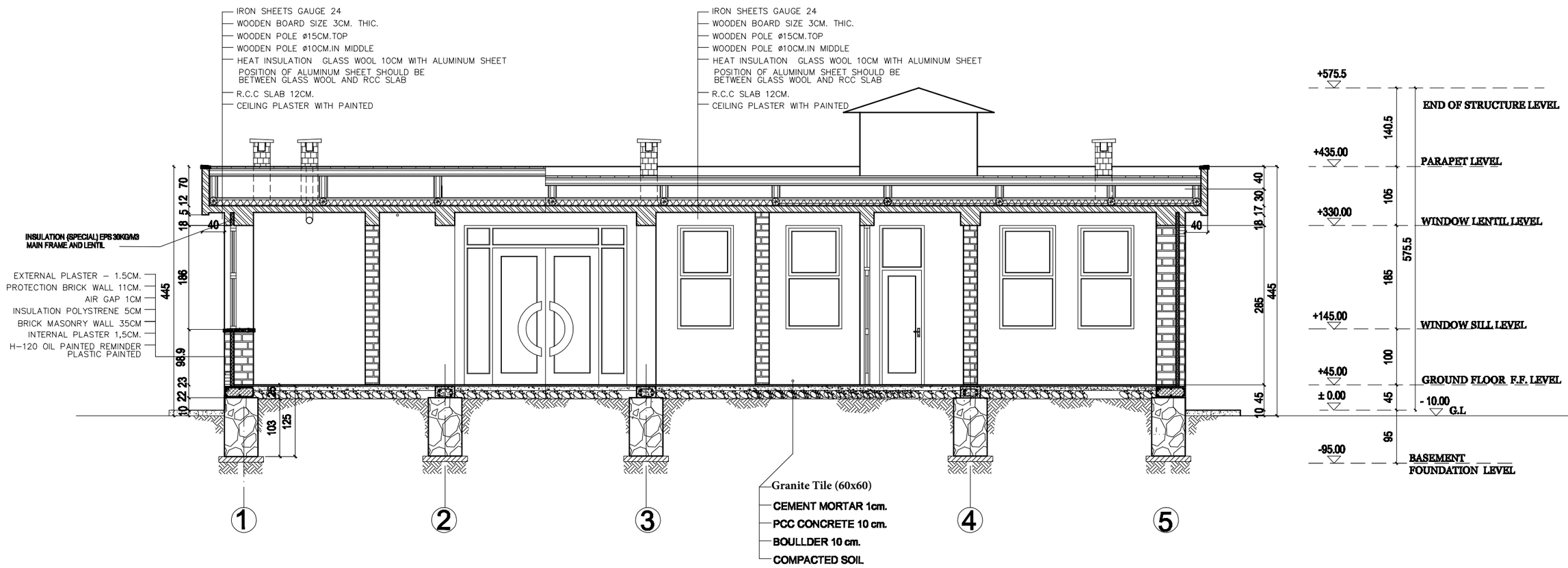

1 SECTION (B-B)
SCALE =1/75

CAD FILE		BASIC HEALTH CLINIC (BHC)	REVISIONS					INITL	SIG.	DATE	BASIC HEALTH CLINIC (BHC) KABUL - AFGHANISTAN
SCALE	1:75		NO.	REVISION	NAME	INITL.	DATE	PRODUCED BY	BaCEAG		July–2008
DRAWING NUMBER	BHC.AR-007	SECTION B-B						DESIGNED BY	Ar.M.Saber		July–2008
PROJECT NUMBER								CHECKED BY	Eng.A.Karim		July–2008
								APPROVALS			
								PROJECT MANAGER			
								PROJECT DIRECTOR			

ARCHITECT
BaCEAG
CONSULTATIVE ENGINEERING & ARCHITECTURAL GROUP
Email: baceag@yahoo.com
Mobile: 0799 335 666 , 0799 304 476

CLIENT
MINISTRY OF PUBLIC HEALTH
AFGHANISTAN

RECIPIENT

1 SIDE ELEVATION
SCALE =1/75

CAD FILE		BASIC HEALTH CLINIC (BHC)	REVISIONS						INITL	SIG.	DATE	BASIC HEALTH CLINIC (BHC) KABUL - AFGHANISTAN	ARCHITECT BaCEAG CONSULTATIVE ENGINEERING & ARCHITECTURAL GROUP Email: baceag@yahoo.com Mobile: 0799 335 666 , 0799 304 476	CLIENT MINISTRY OF PUBLIC HEALTH AFGHANISTAN	RECIPIENT
SCALE	1:75		NO.	REVISION	NAME	INITL.	DATE	PRODUCED BY	BaCEAG		July-2008				
DRAWING NUMBER	BHC.AR-005	SIDE ELEVATION						DESIGNED BY	Ar.M.Saber		July-2008				
PROJECT NUMBER								CHECKED BY	Eng.A.Karim		July-2008				
								APPROVALS							
								PROJECT MANAGER							
								PROJECT DIRECTOR							

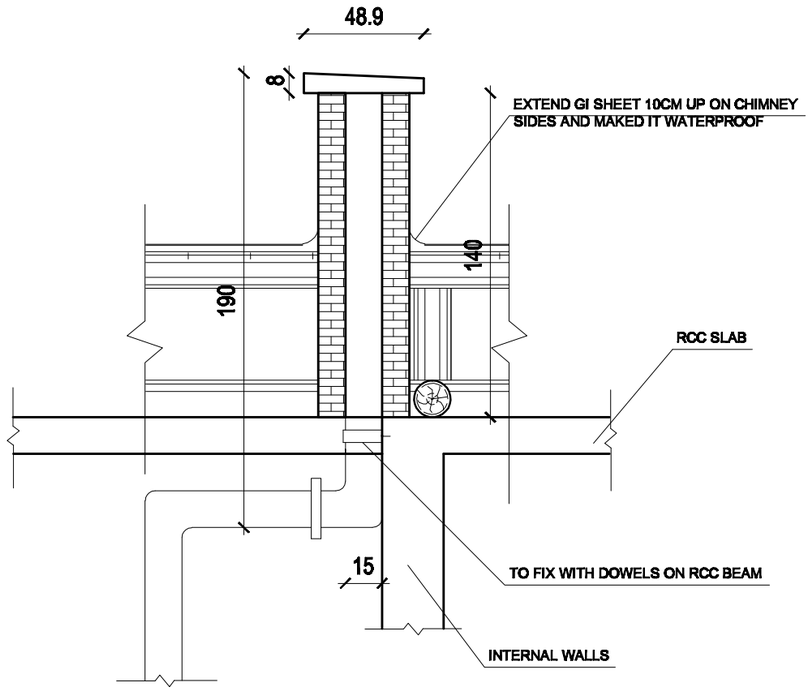

CHIMNEY DETAIL UNDER CEILING

D # 5

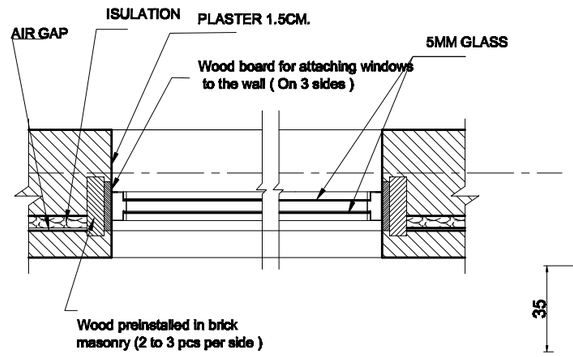

Details #1
Windows Installation

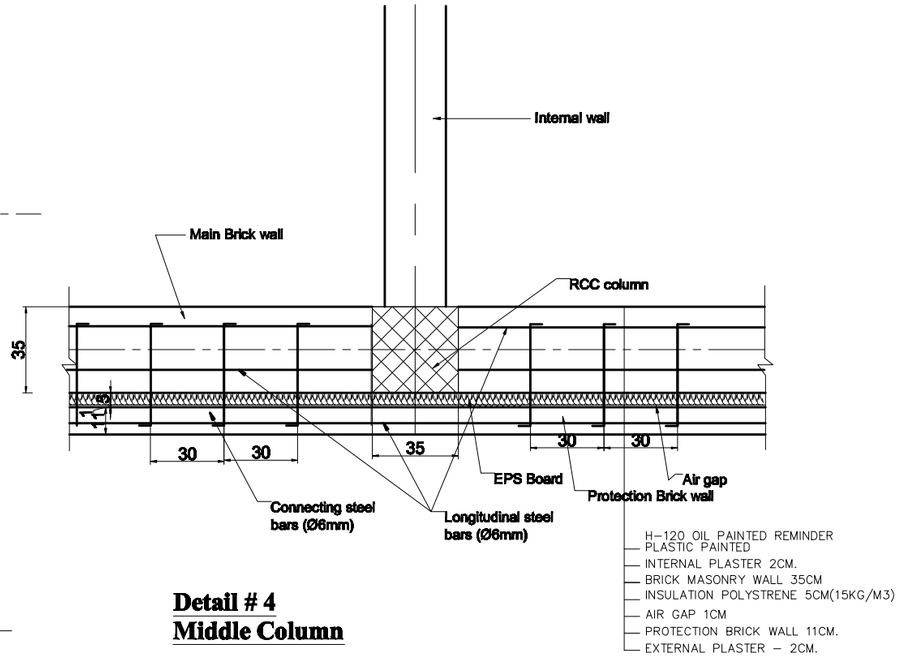

Detail # 4
Middle Column

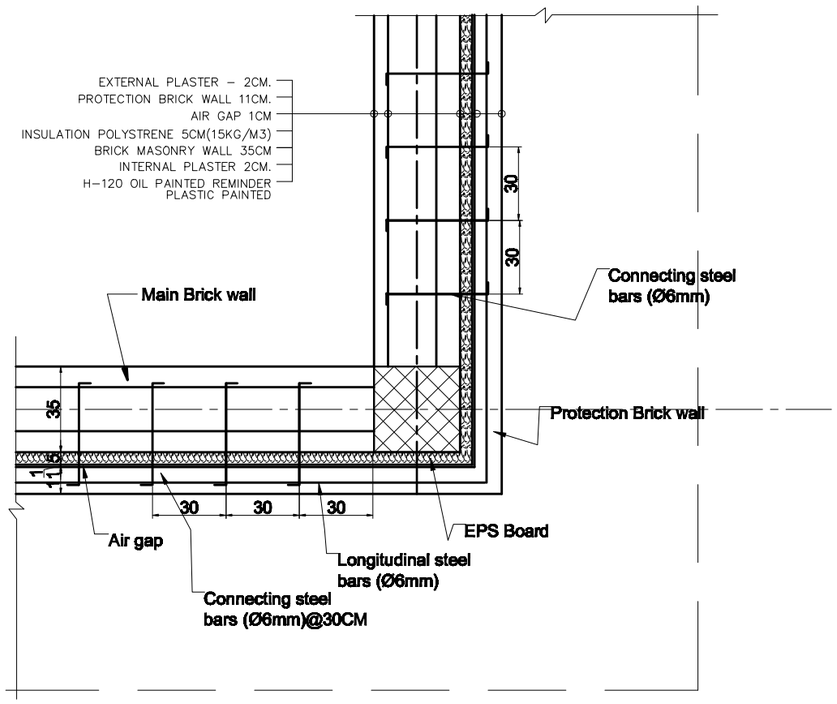

Detail # 3
Corner Column

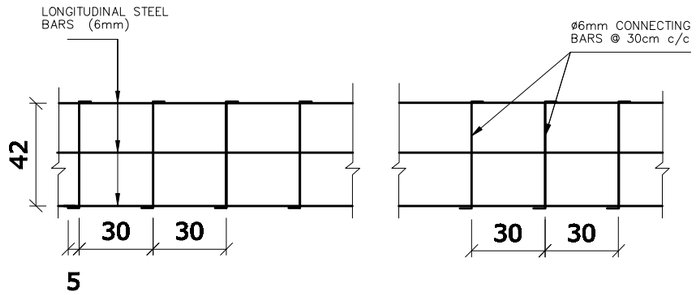

Detail # 1
Connection Steel Bars Structure

CAD FILE		BASIC HEALTH CLINIC (BHC)	REVISIONS					INITL	SIG.	DATE	BASIC HEALTH CLINIC (BHC) KABUL - AFGHANISTAN	ARCHITECT BaCEAG CONSULTATIVE ENGINEERING & ARCHITECTURAL GROUP Email: baceag@yahoo.com Mobile: 0700 285 688 , 0700 284 470	CLIENT MINISTRY OF PUBLIC HEALTH AFGHANISTAN	RECIPIENT
SCALE	1:50		NO.	REVISION	NAME	INITL.	DATE	PRODUCED BY	BaCEAG		July-2008			
DRAWING NUMBER	BHC.AR-012	Details for conection of protectoin Wall and steel bars						DESIGNED BY	Ar.M.Saber		July-2008			
PROJECT NUMBER								CHECKED BY	Eng.A.Karim		July-2008			
								APPROVALS						
								PROJECT MANAGER						
								PROJECT DIRECTOR						

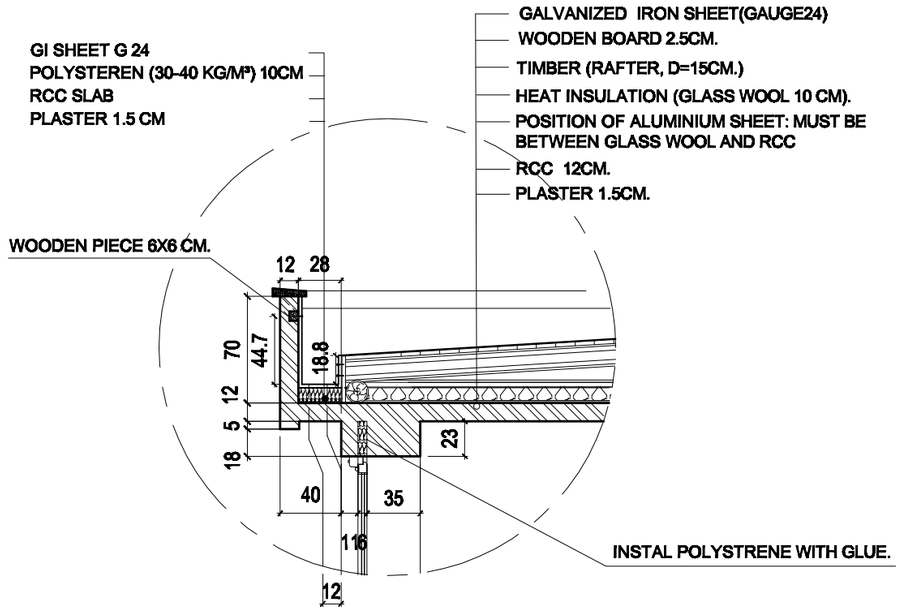

D - 1

1 DETAIL - A
SCALE =1/40

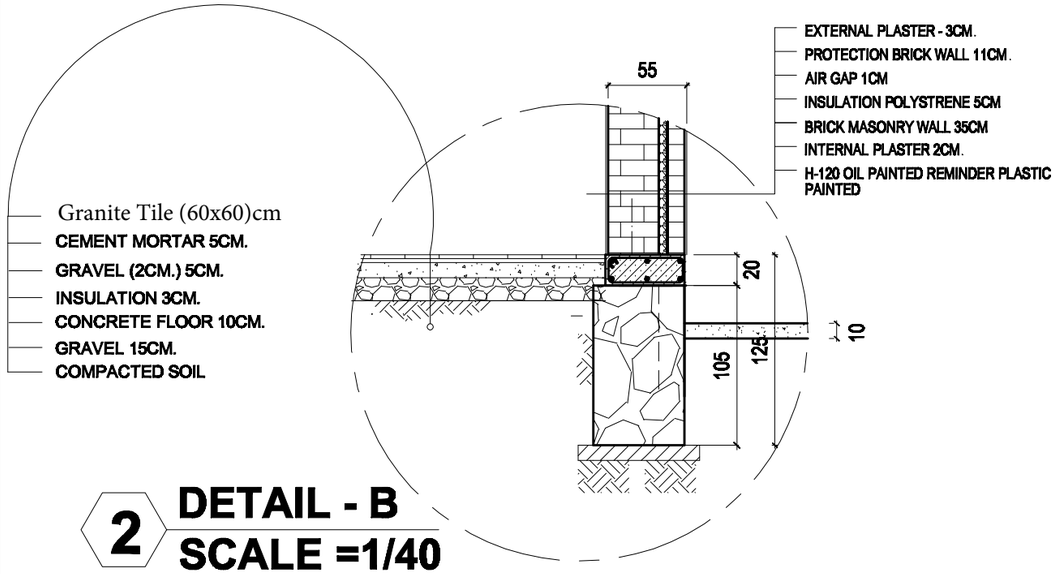

2 DETAIL - B
SCALE =1/40

D - 2

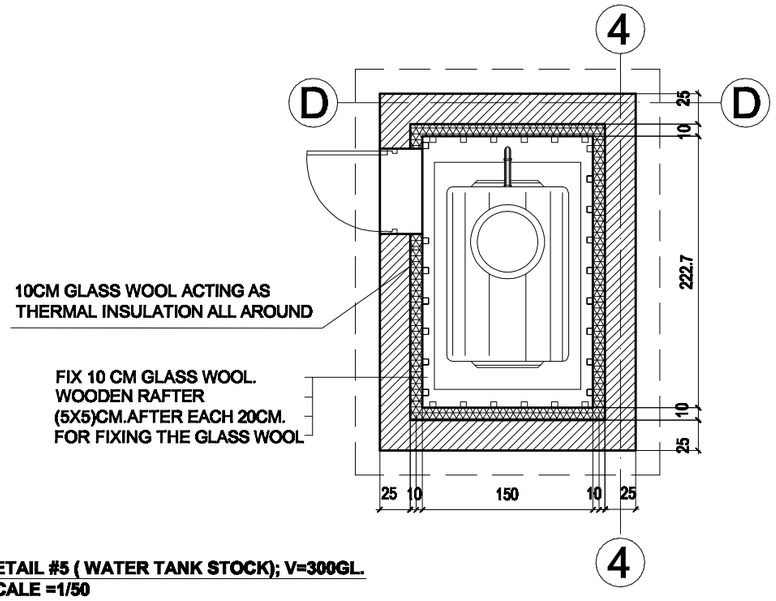

3 DETAIL #5 (WATER TANK STOCK); V=300GL.
SCALE =1/50

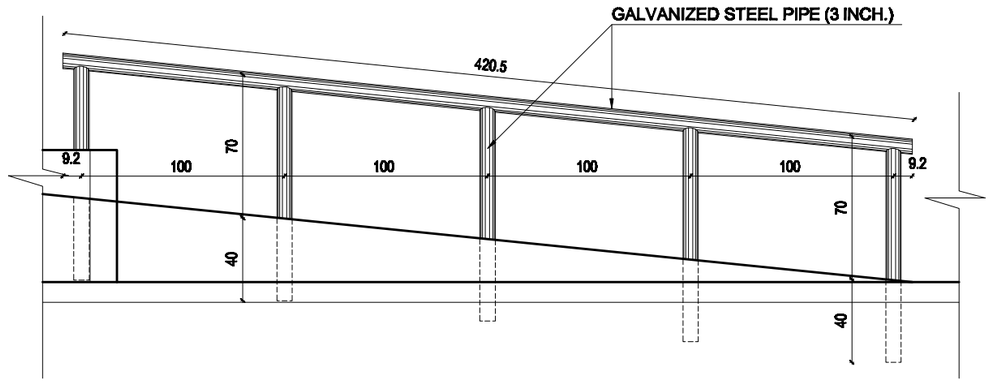

4 DETAIL # 4 HAND RAIL OF ENTERANCE RAMP
SCALE =1/30

CAD FILE		BASIC HEALTH CLINIC (BHC)	REVISIONS					INITL	SIG.	DATE	BASIC HEALTH CLINIC (BHC) KABUL - AFGHANISTAN
SCALE	1:50 1:40, 1:30		NO.	REVISION	NAME	INITL.	DATE	PRODUCED BY	BaCEAG		July–2008
DRAWING NUMBER	BHC.AR-008	Details						DESIGNED BY	Ar.M.Saber		July–2008
PROJECT NUMBER								CHECKED BY	Eng.A.Karim		July–2008
								APPROVALS			
								PROJECT MANAGER			
								PROJECT DIRECTOR			

ARCHITECT
BaCEAG
CONSULTATIVE ENGINEERING & ARCHITECTURAL GROUP
Email: baceag@yahoo.com
Mobile: 0799 335 666 , 0799 304 476

CLIENT
MINISTRY OF PUBLIC HEALTH
AFGHANISTAN

RECIPIENT

CODE	STRUCTURAL OPEN W	STRUCTURAL OPEN H	NO	SPECS.	DIMENSION
D4	261	285	1	*P.V.C FRAME *FIXED WINDOW *P.V.C DOOR * 5mm. THICK. DOUBLE GLASS LIGHTING PANEL *DOOR HOLDERS	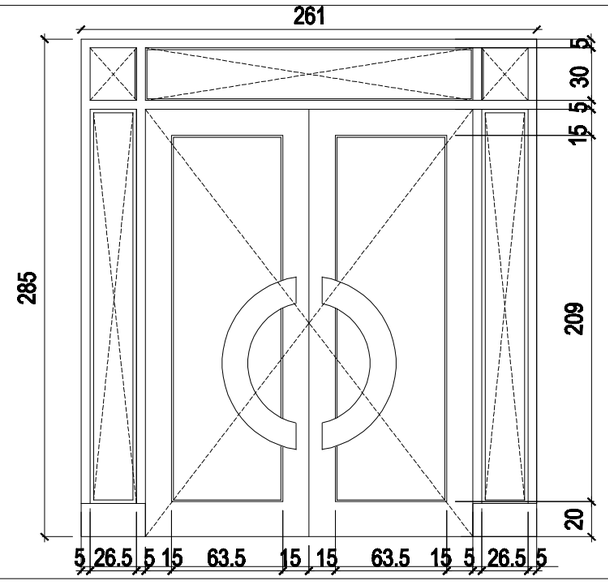

CODE	STRUCTURAL OPEN W	STRUCTURAL OPEN H	NO	SPECS.	DIMENSION
W1	100	185	26	*P.V.C FRAME *FIXED WINDOWS *OPEN WINDOW *5mm. DOUBLE GLASS	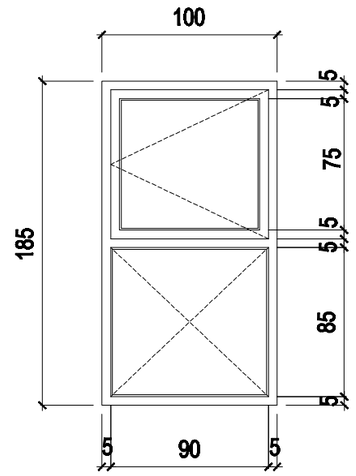

CODE	STRUCTURAL OPEN W	STRUCTURAL OPEN H	NO	SPECS.	DIMENSION
W2	120	185	1	*P.V.C FRAME *FIXED WINDOWS *OPEN WINDOW *5mm. DOUBLE GLASS	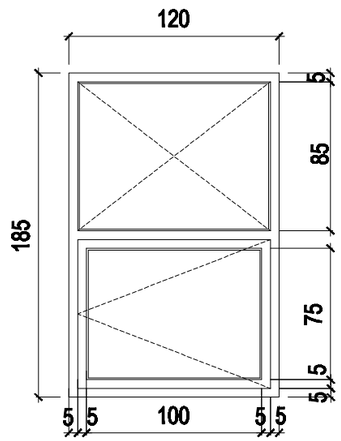

CODE	STRUCTURAL OPEN W	STRUCTURAL OPEN H	NO	SPECS.	DIMENSION
W3	100	60	1	*P.V.C FRAME *OPEN WINDOW *5mm THICK. DOUBLE GLASS	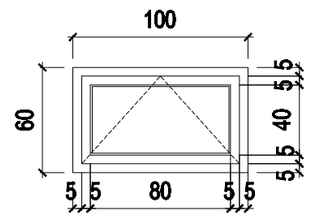

CAD FILE		BASIC HEALTH CLINIC (BHC)	REVISIONS					INITL	SIG.	DATE	BASIC HEALTH CLINIC (BHC) KABUL - AFGHANISTAN
SCALE	1:35		NO.	REVISION	NAME	INITL.	DATE	PRODUCED BY	BaCEAG		July-2008
DRAWING NUMBER	BHC.AR-011							DESIGNED BY	Ar.M.Saber		July-2008
PROJECT NUMBER		DOOR & WINDOWS DETAILS 2						CHECKED BY	Eng.A.Karim		July-2008
								APPROVALS			
								PROJECT MANAGER			
								PROJECT DIRECTOR			

ARCHITECT

BaCEAG
CONSULTATIVE ENGINEERING & ARCHITECTURAL GROUP

Email: baceag@yahoo.com
Mobile: 0799 335 666 , 0799 304 476

CLIENT

MINISTRY OF PUBLIC HEALTH

AFGHANISTAN

RECIPIENT

CODE	STRUCTURAL OPEN W	STRUCTURAL OPEN H	NO	SPECS.	DIMENSION
D1	100	285	9	*P.V.C FRAME *P.V.C DOOR *5mm THICK. DOUBLE GLASS LIGHTING PANEL *DOOR HOLDER	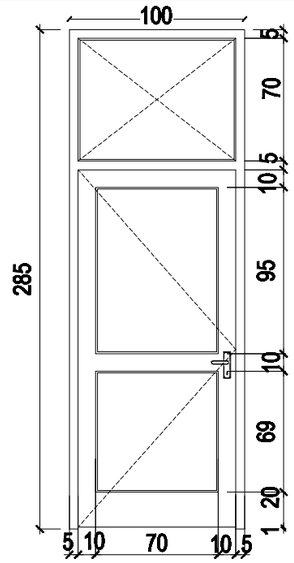

CODE	STRUCTURAL OPEN W	STRUCTURAL OPEN H	NO	SPECS.	DIMENSION
D2	80	285	1	*P.V.C FRAME *P.V.C DOOR *5mm THICK. DOUBLE GLASS LIGHTING PANEL *DOOR HOLDER	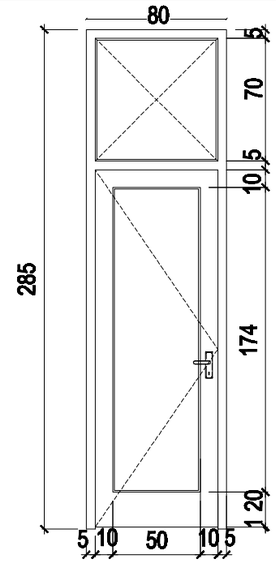

CODE	STRUCTURAL OPEN W	STRUCTURAL OPEN H	NO	SPECS.	DIMENSION

CODE	STRUCTURAL OPEN W	STRUCTURAL OPEN H	NO	SPECS.	DIMENSION
D5	291	285	1	*P.V.C FRAME *FIXED WINDOW *P.V.C DOOR * 5mm. THICK. DOUBLE GALSS LIGHTING PANEL *DOOR HOLDERS	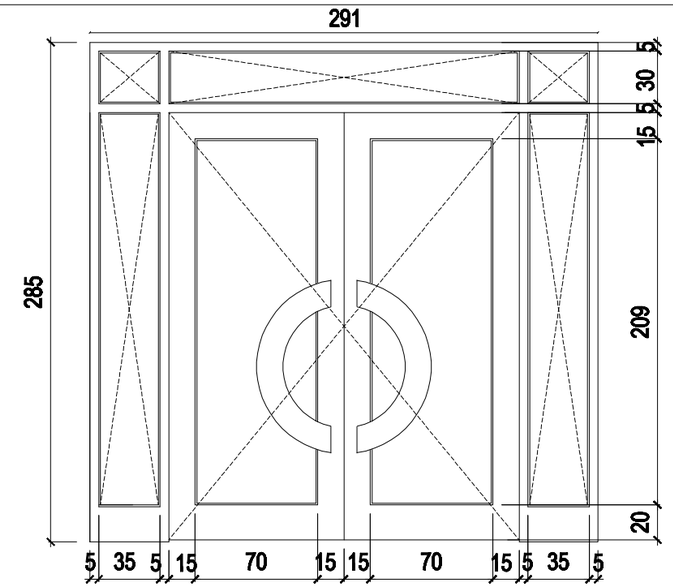

CAD FILE		BASIC HEALTH CLINIC (BHC)	REVISIONS					INITL	SIG.	DATE	BASIC HEALTH CLINIC (BHC) KABUL - AFGHANISTAN
SCALE	1:35		NO.	REVISION	NAME	INITL.	DATE	PRODUCED BY	BaCEAG		July-2008
DRAWING NUMBER	BHC.AR-010	DOORS DETAILS 1						DESIGNED BY	Ar.M.Saber		July-2008
PROJECT NUMBER								CHECKED BY	Eng.A.Karim		July-2008
								APPROVALS			
								PROJECT MANAGER			
								PROJECT DIRECTOR			

ARCHITECT
BaCEAG
CONSULTATIVE ENGINEERING & ARCHITECTURAL GROUP
Email: baceag@yahoo.com
Mobile: 0799 335 865 , 0799 394 476

CLIENT
MINISTRY OF PUBLIC HEALTH
AFGHANISTAN

RECIPIENT

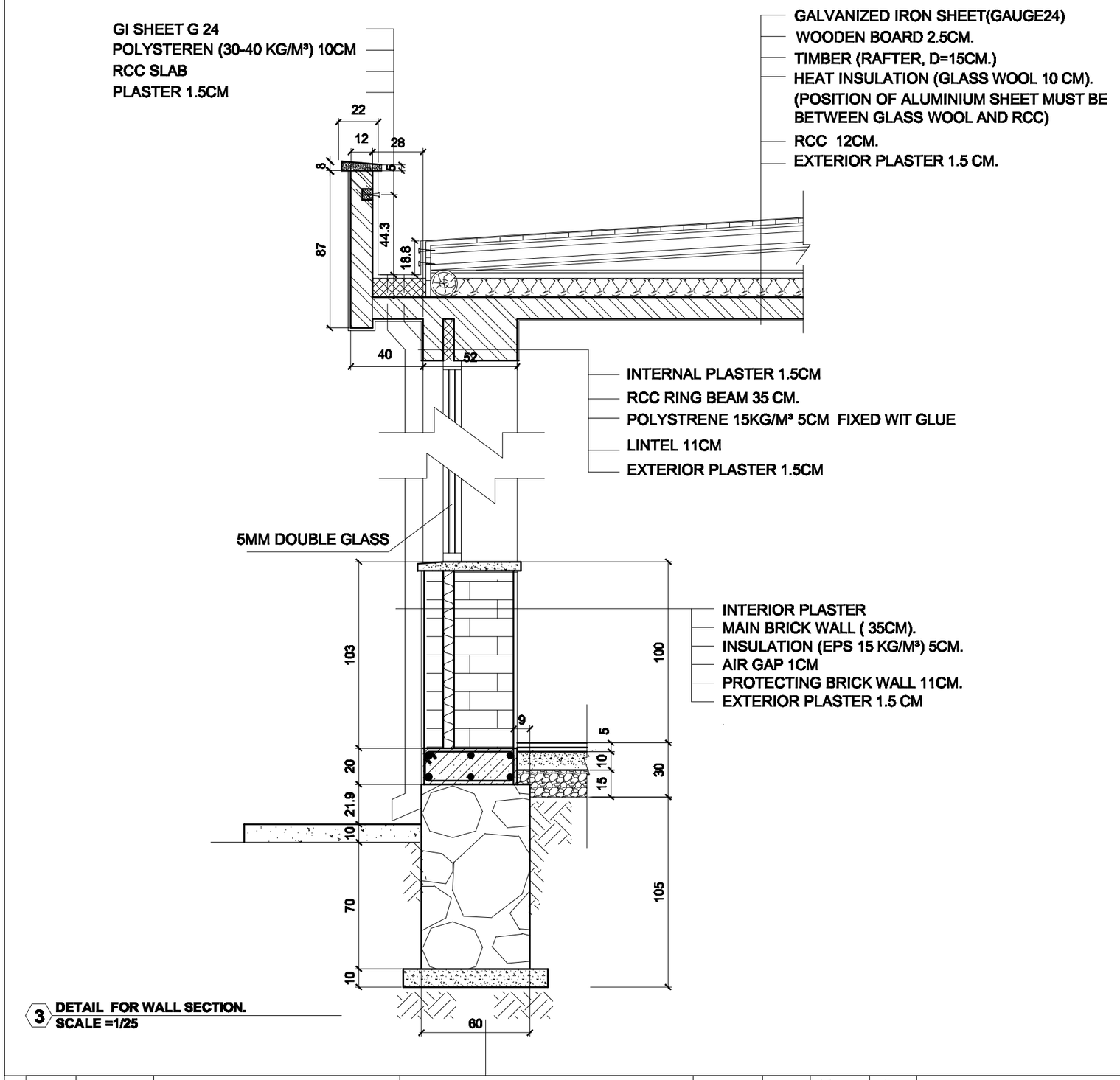

3 DETAIL FOR WALL SECTION.
SCALE =1/25

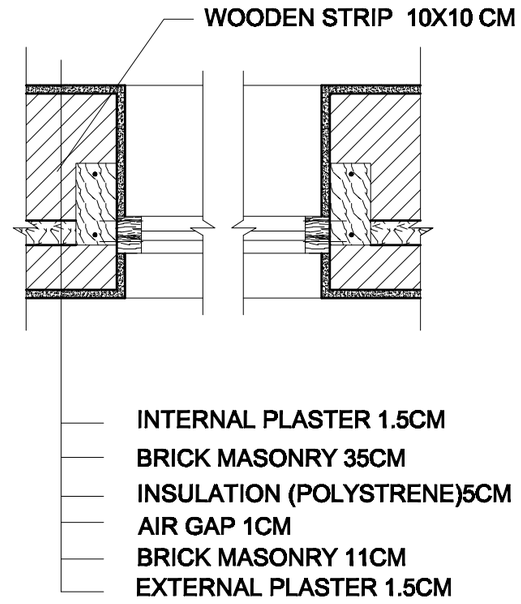

CAD FILE		BASIC HEALTH CLINIC (BHC)	REVISIONS					INITL	SIG.	DATE	BASIC HEALTH CLINIC (BHC) KABUL - AFGHANISTAN	ARCHITECT
SCALE	1:25		NO.	REVISION	NAME	INITL.	DATE	PRODUCED BY	BaCEAG		July-2008	BaCEAG CONSULTATIVE ENGINEERING & ARCHITECTURAL GROUP
DRAWING NUMBER	BHC.AR-009							DESIGNED BY	Ar.M.Saber		July-2008	Email: baceag@yahoo.com
		WALL SECTION						CHECKED BY	Eng.A.Karim		July-2008	Mobile: 0799 335 666 , 0799 304 476
PROJECT NUMBER								APPROVALS				
								PROJECT MANAGER				
								PROJECT DIRECTOR				

CLIENT: MINISTRY OF PUBLIC HEALTH AFGHANISTAN

RECIPIENT

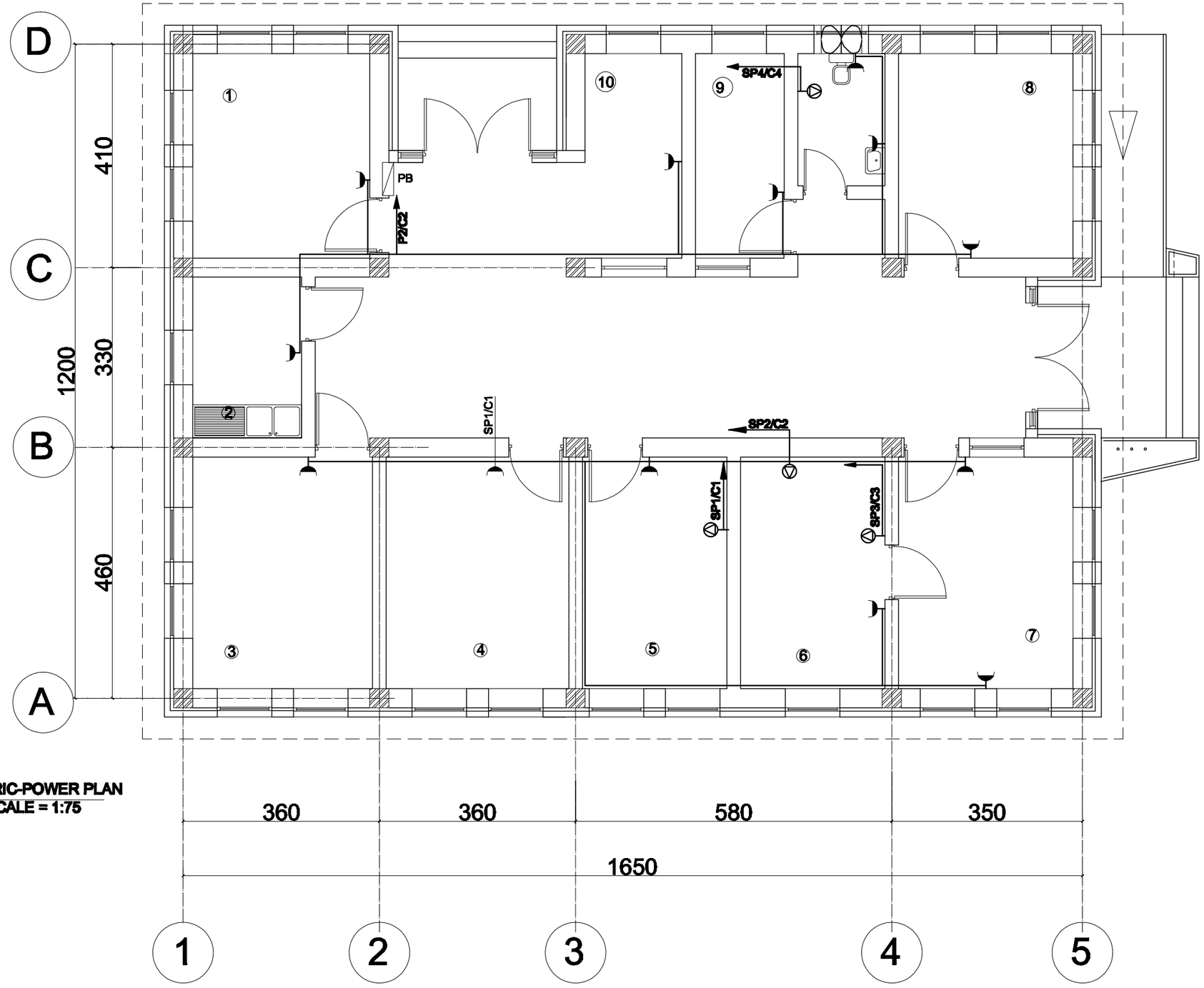

ELECTRIC-POWER PLAN
SCALE = 1:75

CAD FILE		BASIC HEALTH CLINIC (BHC)	REVISIONS					INITL	SIG.	DATE	BASIC HEALTH CLINIC (BHC) KABUL - AFGHANISTAN
SCALE	1:75		NO.	REVISION	NAME	INITL.	DATE	PRODUCED BY	BaCEAG		July-2008
DRAWING NUMBER	BHC.EL-003							DESIGNED BY	Eng.M.Anwar		July-2008
PROJECT NUMBER		POWER PLAN						CHECKED BY	Eng.A.Karim		July-2008
								APPROVALS			
								PROJECT MANAGER			
								PROJECT DIRECTOR			

ARCHITECT
BaCEAG
CONSULTATIVE ENGINEERING & ARCHITECTURAL GROUP
Email: baceag@yahoo.com
Mobile: 0799 335 666 , 0799 364 476

CLIENT
MINISTRY OF PUBLIC HEALTH
AFGHANISTAN

RECIPIENT

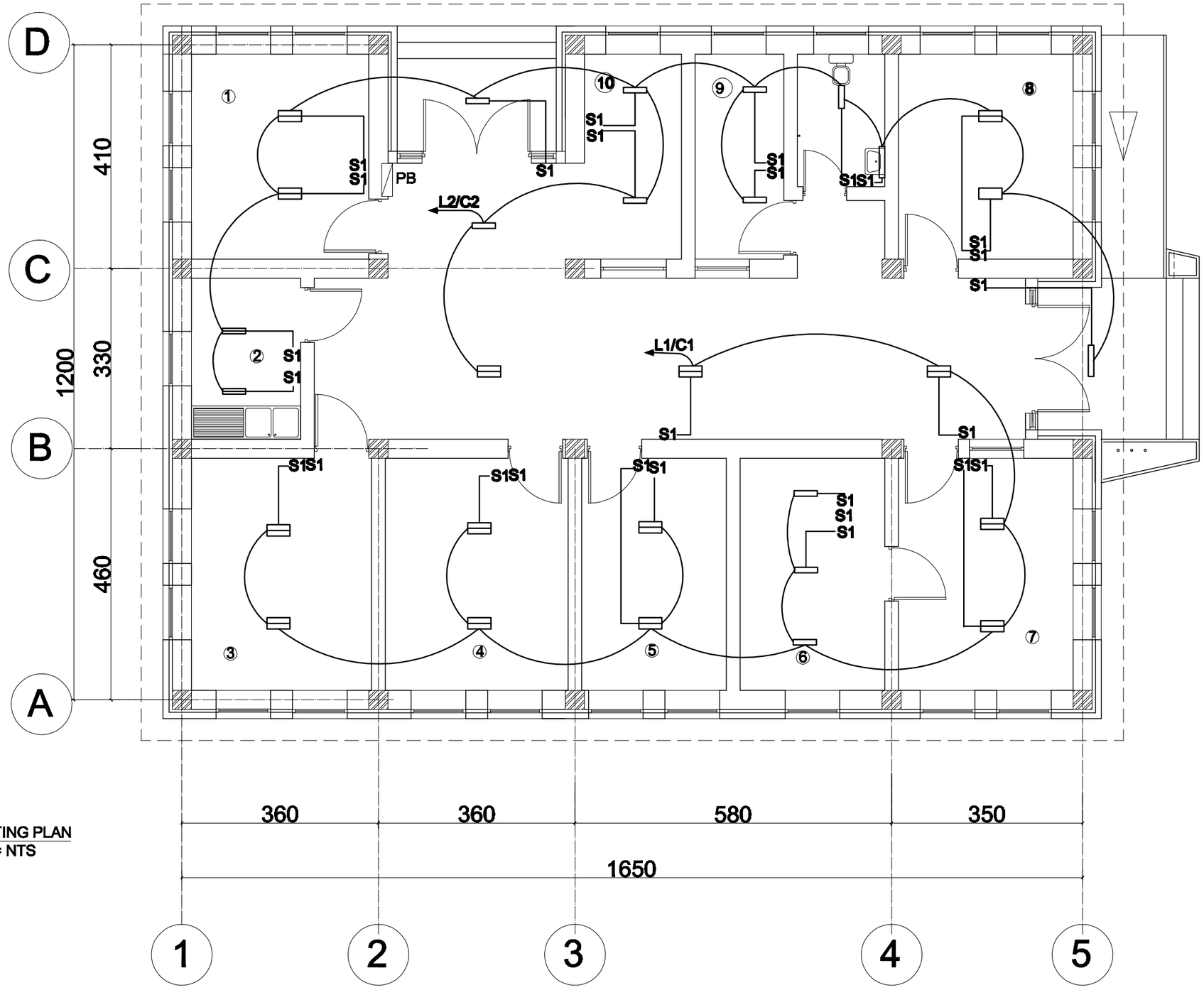

① ELECT-LIGHTING PLAN
SCALE = NTS

CAD FILE		BASIC HEALTH CLINIC (BHC)	REVISIONS					INITL	SIG.	DATE	BASIC HEALTH CLINIC (BHC) KABUL - AFGHANISTAN
SCALE	NTS		NO.	REVISION	NAME	INITL.	DATE	PRODUCED BY	BaCEAG		July-2008
DRAWING NUMBER	BHC.EL-001							DESIGNED BY	Eng.M.Anwar		July-2008
		ELEC, LIGHTING PLAN						CHECKED BY	Eng.A.Karim		July-2008
PROJECT NUMBER								APPROVALS			
								PROJECT MANAGER			
								PROJECT DIRECTOR			

ARCHITECT
BaCEAG
CONSULTATIVE ENGINEERING & ARCHITECTURAL GROUP
Email: baceag@yahoo.com
Mobile: 0799 335 666 , 0799 304 475

CLIENT
MINISTRY OF PUBLIC HEALTH
AFGHANISTAN

RECIPIENT

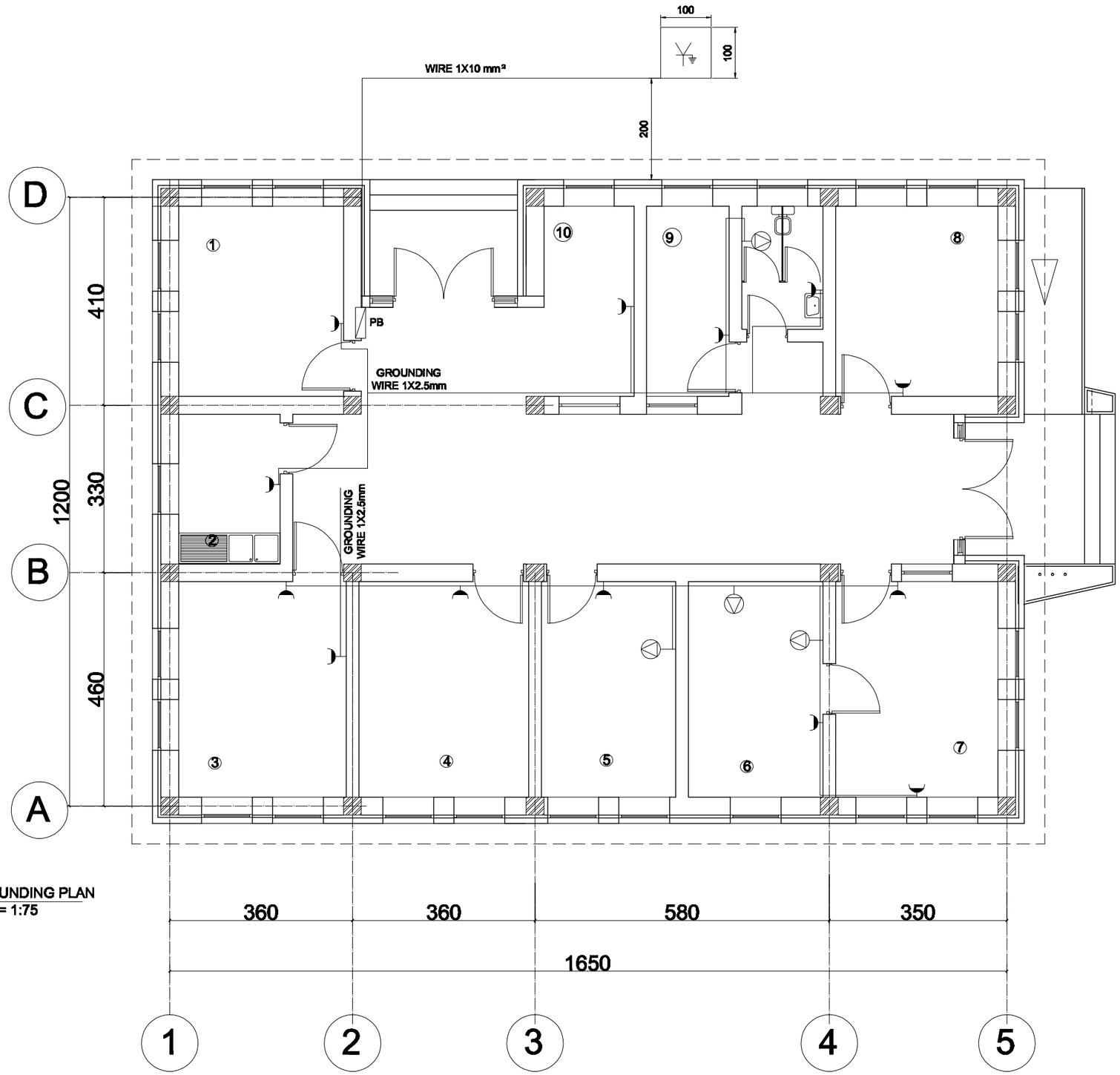

ELECTRIC-GROUNDING PLAN
SCALE = 1:75

CAD FILE		BASIC HEALTH CLINIC (BHC)	REVISIONS					INITL	SIG.	DATE	BASIC HEALTH CLINIC (BHC) KABUL - AFGHANISTAN	ARCHITECT BaCEAG CONSULTATIVE ENGINEERING & ARCHITECTURAL GROUP Email: bacsag@yahoo.com Mobile: 0799 335 666 , 0799 364 476	CLIENT MINISTRY OF PUBLIC HEALTH AFGHANISTAN	RECIPIENT
SCALE	1:75		NO.	REVISION	NAME	INITL.	DATE	PRODUCED BY	BaCEAG		July-2008			
DRAWING NUMBER	BHC.EL-004							DESIGNED BY	Eng.M.Anwar		July-2008			
PROJECT NUMBER		ELEC. GROUNDING PLAN						CHECKED BY	Eng.A.Karim		July-2008			
								APPROVALS						
								PROJECT MANAGER						
								PROJECT DIRECTOR						

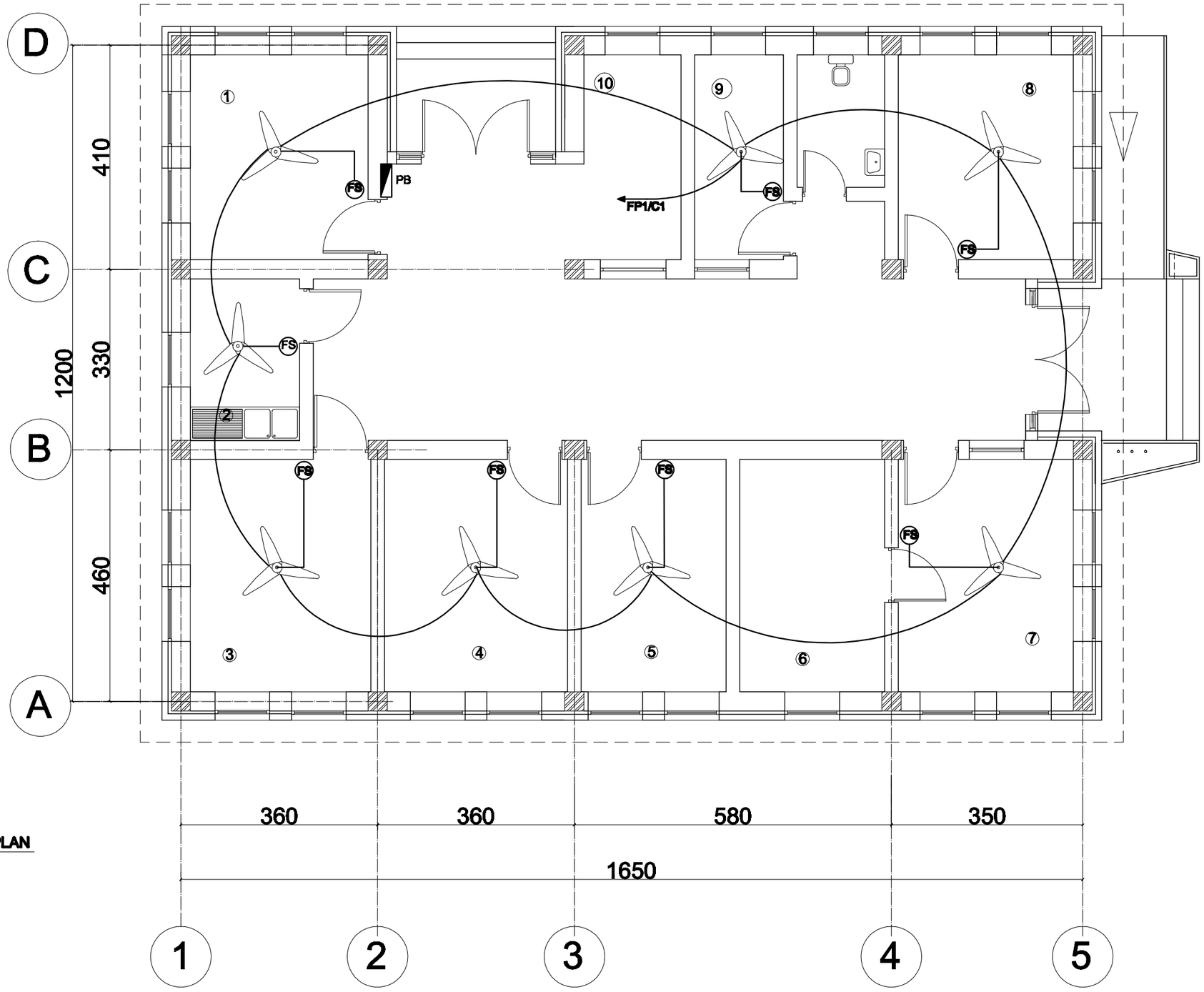

① **FAN INSTALLATION PLAN**
SCALE = NTS

CAD FILE		**BASIC HEALTH CLINIC (BHC)**	REVISIONS					INITL	SIG.	DATE	**BASIC HEALTH CLINIC (BHC) KABUL - AFGHANISTAN**
SCALE	NTS		NO.	REVISION	NAME	INITL.	DATE	PRODUCED BY	BaCEAG		July–2008
DRAWING NUMBER	BHC.EL-002	FAN INSTALATION PLAN						DESIGNED BY	Eng.M.Anwar		July–2008
								CHECKED BY	Eng.A.Karim		July–2008
PROJECT NUMBER								APPROVALS			
								PROJECT MANAGER			
								PROJECT DIRECTOR			

ARCHITECT
BaCEAG
CONSULTATIVE ENGINEERING & ARCHITECTURAL GROUP
Email: baceag@yahoo.com
Mobile: 0799 335 668 , 0799 384 476

CLIENT
MINISTRY OF PUBLIC HEALTH
AFGHANISTAN

RECIPIENT

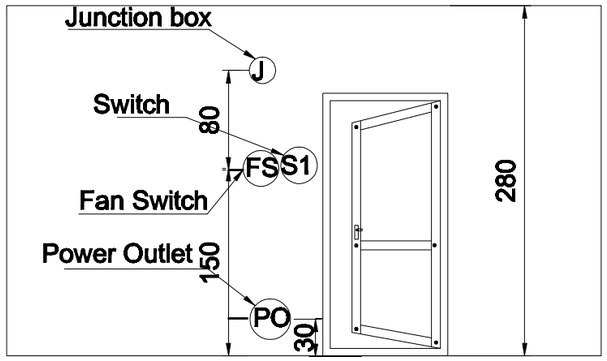

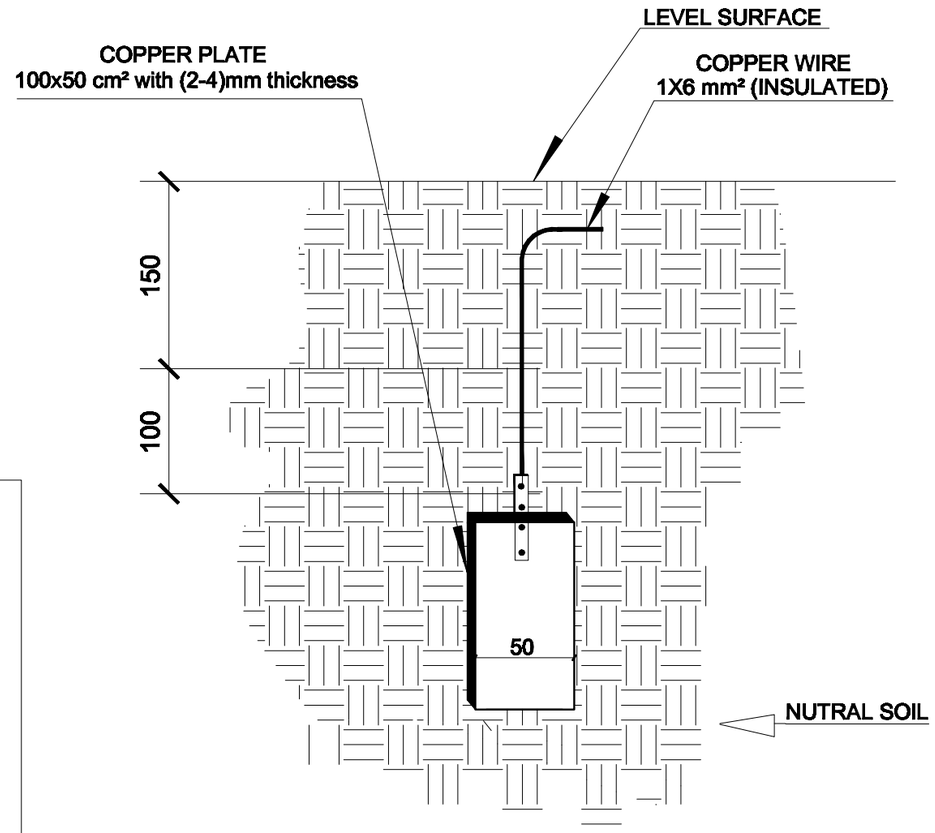

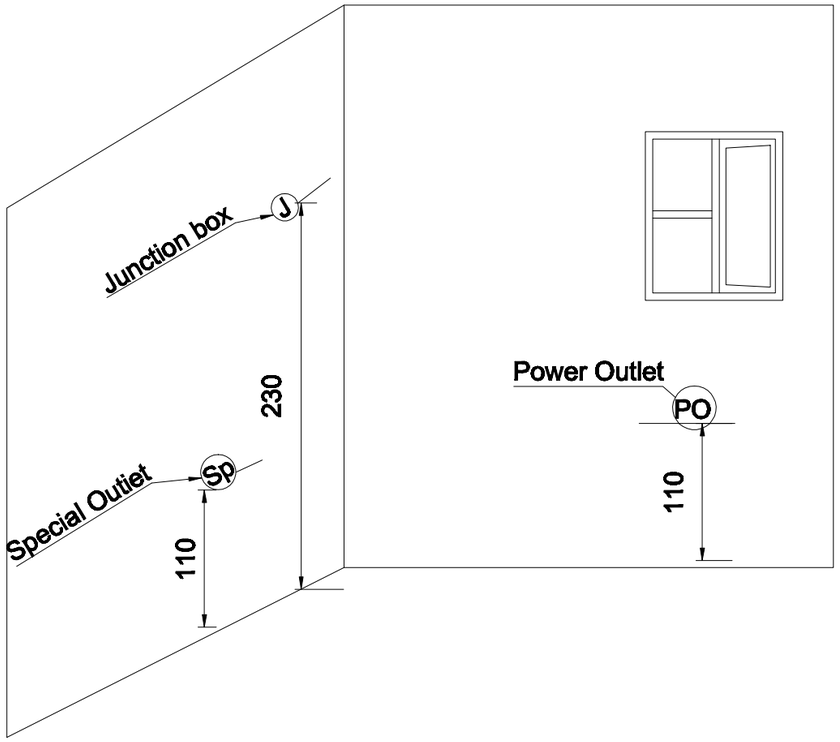

POWER OUTLET INSTALLATION AND GROUNDING DETAIL

1 SCALE = NTS

CAD FILE		BASIC HEALTH CLINIC (BHC)	REVISIONS					INITL	SIG.	DATE	BASIC HEALTH CLINIC (BHC) KABUL - AFGHANISTAN
SCALE	NTS		NO.	REVISION	NAME	INITL.	DATE	PRODUCED BY	BaCEAG		July-2008
DRAWING NUMBER	BHC.EL-009	POWER OUTLET INSTALTION & GROUNDING DETAILS						DESIGNED BY	Eng.M.Anwar		July-2008
PROJECT NUMBER								CHECKED BY	Eng.A.Karim		July-2008
								APPROVALS			
								PROJECT MANAGER			
								PROJECT DIRECTOR			

ARCHITECT
BaCEAG
CONSULTATIVE ENGINEERING & ARCHITECTURAL GROUP
Email: baceag@yahoo.com
Mobile: 0799 335 666 , 0799 304 476

CLIENT
MINISTRY OF PUBLIC HEALTH
AFGHANISTAN

RECIPIENT

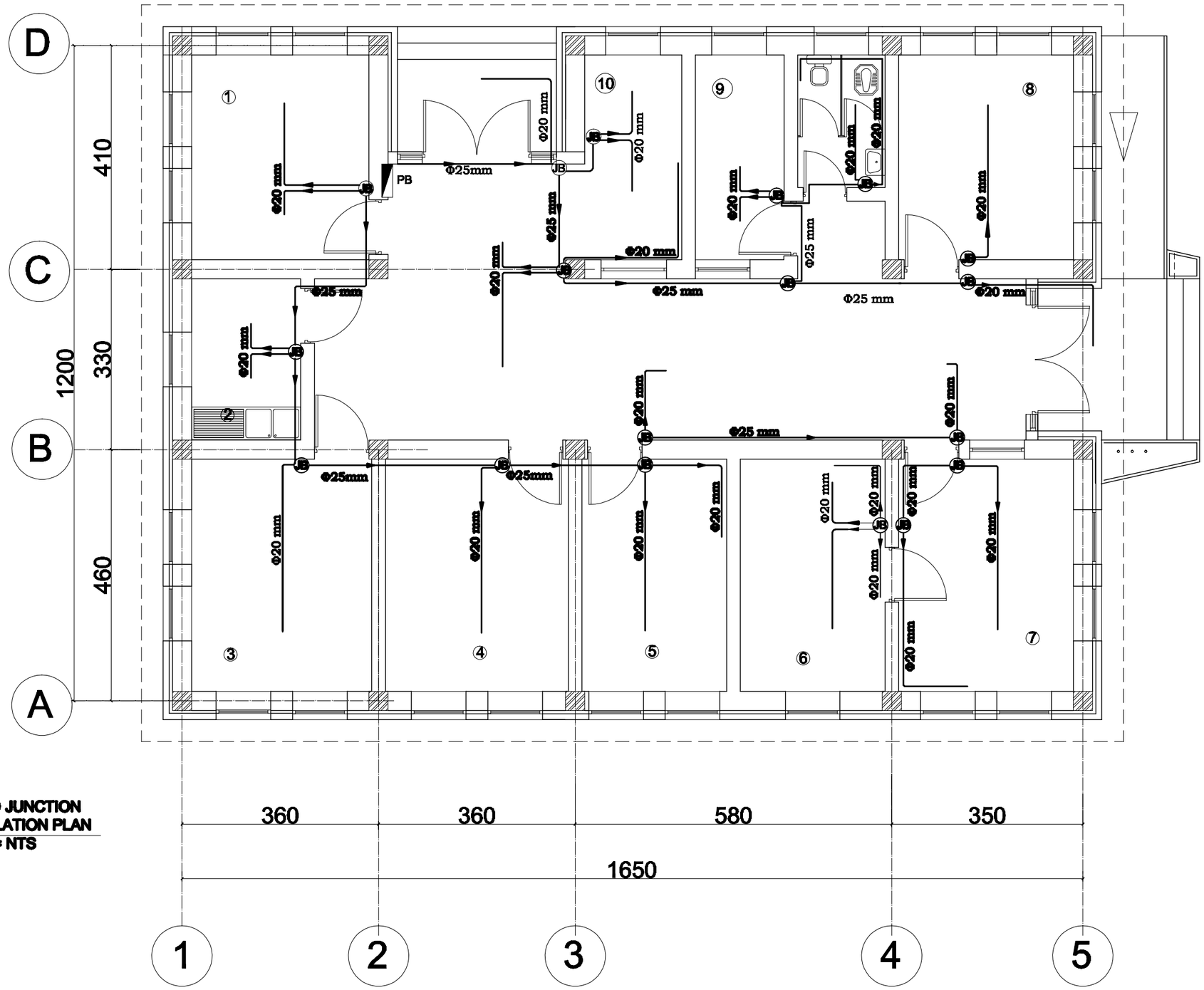

CONDUIT AND JUNCTION BOXES INSTALLATION PLAN
SCALE = NTS

CAD FILE		BASIC HEALTH CLINIC (BHC)	REVISIONS					INITL	SIG.	DATE	BASIC HEALTH CLINIC (BHC) KABUL - AFGHANISTAN
SCALE	NTS		NO.	REVISION	NAME	INITL.	DATE	PRODUCED BY	BaCEAG		July-2008
DRAWING NUMBER	BHC.EL-005	CONDUIT & JUNCTION BOXES INSTALATION PLAN						DESIGNED BY	Eng.M.Anwar		July-2008
								CHECKED BY	Eng.A.Karim		July-2008
PROJECT NUMBER								APPROVALS			
								PROJECT MANAGER			
								PROJECT DIRECTOR			

ARCHITECT
BaCEAG
CONSULTATIVE ENGINEERING & ARCHITECTURAL GROUP
Email: baceag@yahoo.com
Mobile: 0799 335 666 , 0799 304 476

CLIENT
MINISTRY OF PUBLIC HEALTH
AFGHANISTAN

RECIPIENT

POWER AND LIGHTING LEGEND

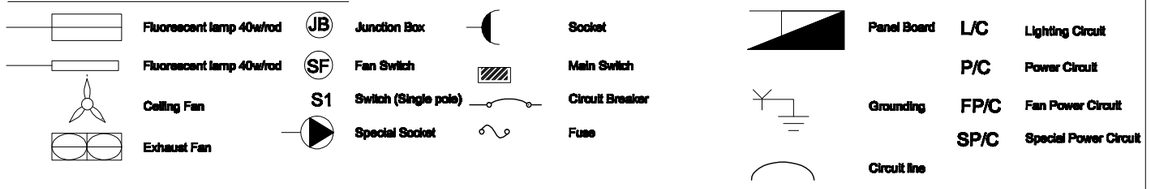

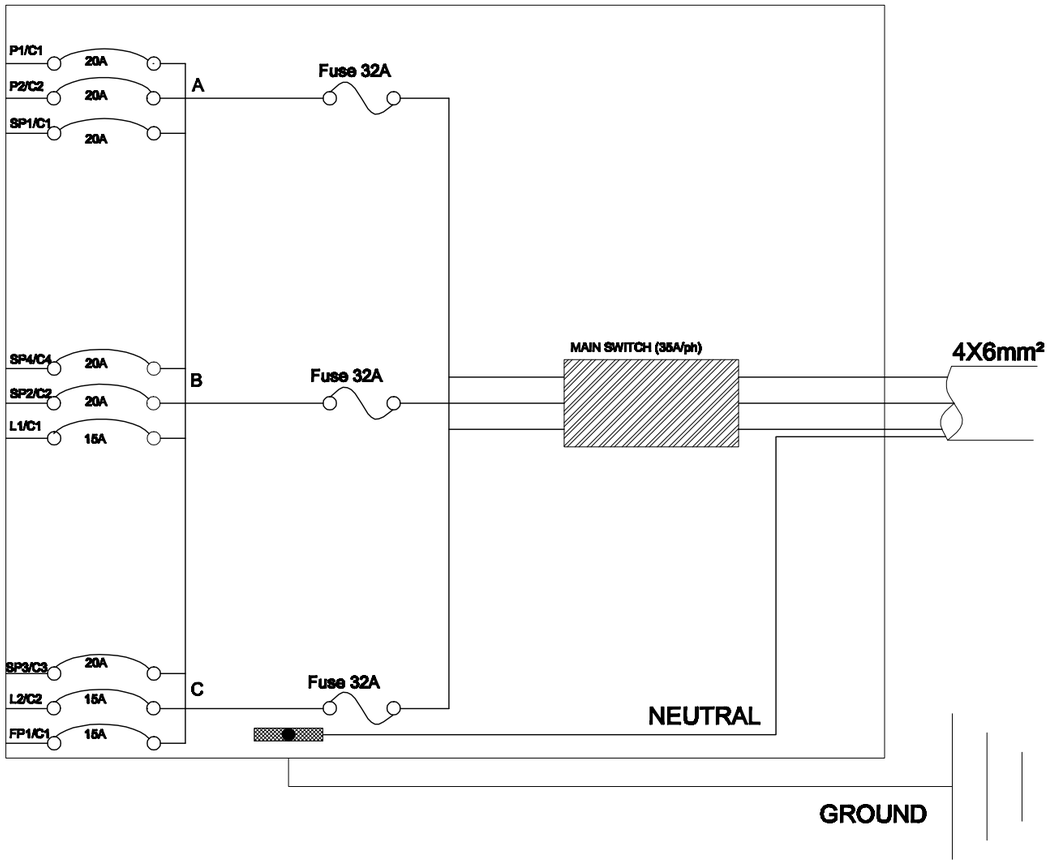

PANEL BOARD NAME PB
PANEL BOARD TYPE MAIN SWITCH
PANEL BOARD LOCATION GROUND FLOOR

C.B. No.	CONDUIT SIZE	TRIP AMP.	MAX. CURRENT	WIRE SIZE	LOCATION	LOAD SERVED	LOAD V.A	
							V.A	PHASE
P2/C2	Ø20mm	20	12.27	3(1X2.5mm²)	R3-R7	SOCKETS	2700	A
P1/C1	Ø20mm	20	12	3(1X2.5mm²)	R1,R2,R8 - R10	SOCKETS	2640	A
SP1/C1	Ø25mm	20	9.1	3(1X4mm²)	ROOM ≠ 5	S - SOCKETS	2000	A
SPARE							1500	A
L1/C1	Ø20mm	15	8.36	2(1X2.5mm²)	R3-R7	LAMPS	1840	B
SP2/C2	Ø25mm	20	18.2	3(1X4mm²)	ROOM ≠ 6	S - SOCKETS	4000	B
SP4/C4	Ø25mm	20	9.1	3(1X4mm²)	TOILET	S - SOCKETS	2000	B
SPARE							1500	B
L2/C2	Ø20mm	15	7.63	2(1X2.5mm²)	R1,R2,R8 - R10	LAMPS	1680	C
FP1/C1	Ø20mm	15	8	2(1X2.5mm²)	ALL ROOMS	FANS	1760	C
SP3/C3	Ø25mm	20	18.3	3(1X4mm²)	ROOM ≠ 6	S - SOCKETS	4000	C
SPARE							1500	C

TOTAL LOAD IN (PB) = 22.62KVA
PHASE BALANCE A=7340 B=7840VA C= 7440VA

SPARE LOAD 20% = 4.5KVA
PHASE BALANCE A= 1500A B= 1500VA C=1500VA

1 ELECTRICAL LEGEND AND LOAD DISTRIBUTION PLAN
SCALE = NTS

CAD FILE		BASIC HEALTH CLINIC (BHC)	REVISIONS						
SCALE	NTS		NO.	REVISION	NAME	INITL.	DATE		
DRAWING NUMBER	BHC.EL-010	ELECTRICAL LEGEND & LOAD DISTRIBUTION PLAN							
PROJECT NUMBER									

	INITL	SIG.	DATE
PRODUCED BY	BaCEAG		July-2008
DESIGNED BY	Eng.M.Anwar		July-2008
CHECKED BY	Eng.A.Karim		July-2008
APPROVALS			
PROJECT MANAGER			
PROJECT DIRECTOR			

BASIC HEALTH CLINIC (BHC) KABUL - AFGHANISTAN

ARCHITECT
BaCEAG CONSULTATIVE ENGINEERING & ARCHITECTURAL GROUP
Email: baceag@yahoo.com
Mobile: 0799 335 666 , 0799 304 476

CLIENT
MINISTRY OF PUBLIC HEALTH
AFGHANISTAN

RECIPIENT

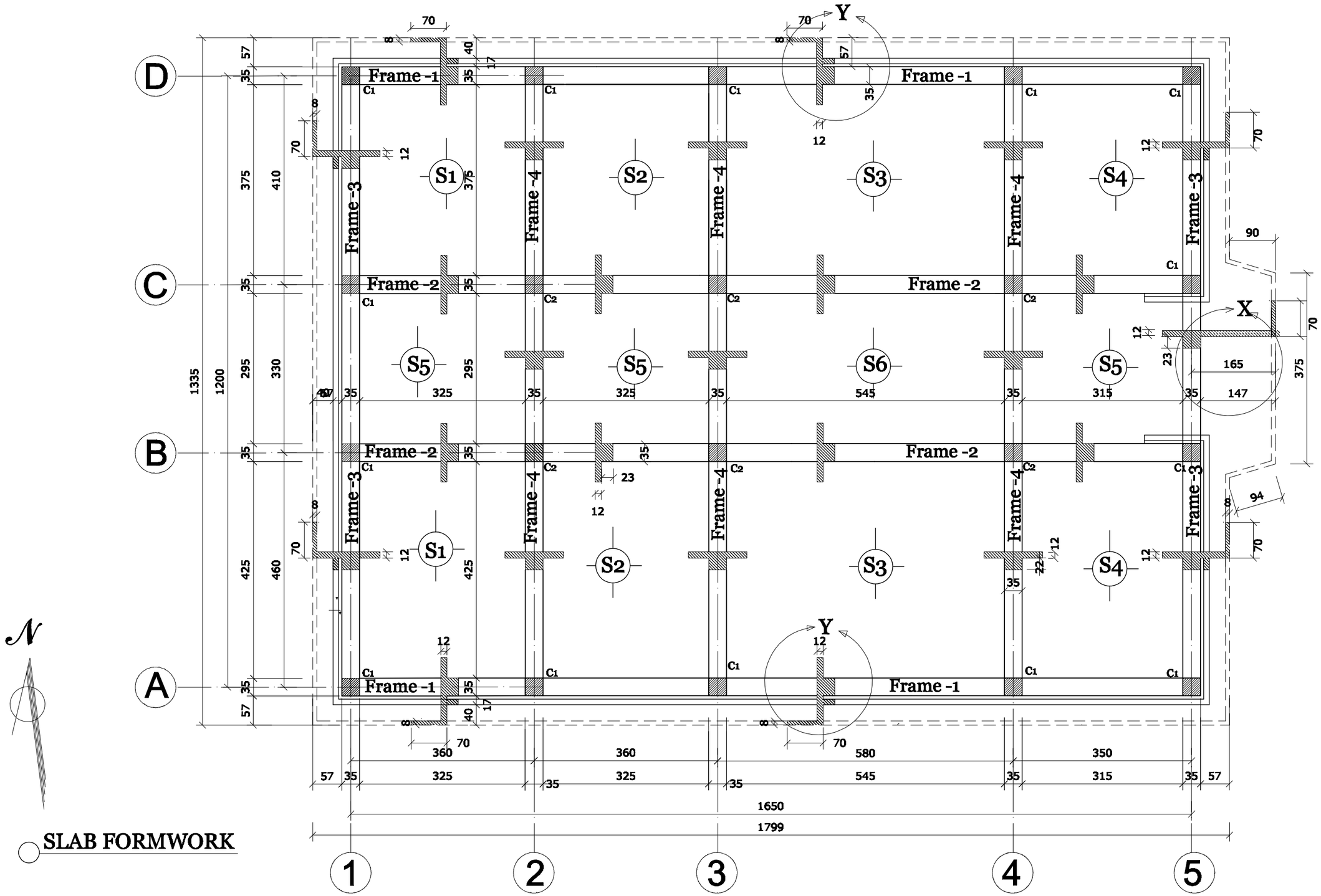

SLAB FORMWORK

CAD FILE		BASIC HEALTH CLINIC (BHC)	REVISIONS								BASIC HEALTH CLINIC (BHC) KABUL - AFGHANISTAN	ARCHITECT BaCEAG CONSULTATIVE ENGINEERING & ARCHITECTURAL GROUP Email: baceag@yahoo.com Mobile: 0700 326 000 , 0700 304 476	CLIENT MINISTRY OF PUBLIC HEALTH AFGHANISTAN	RECIPIENT
SCALE	1:75		NO.	REVISION	NAME	INITL.	DATE		INITL	SIG.	DATE			
DRAWING NUMBER	BHC.ST-004	SLAB FORM WORK PLAN						PRODUCED BY	BaCEAG		July-2008			
PROJECT NUMBER								DESIGNED BY	Eng.Muradi		July-2008			
								CHECKED BY	Eng.A.Karim		July-2008			
								APPROVALS						
								PROJECT MANAGER						
								PROJECT DIRECTOR						

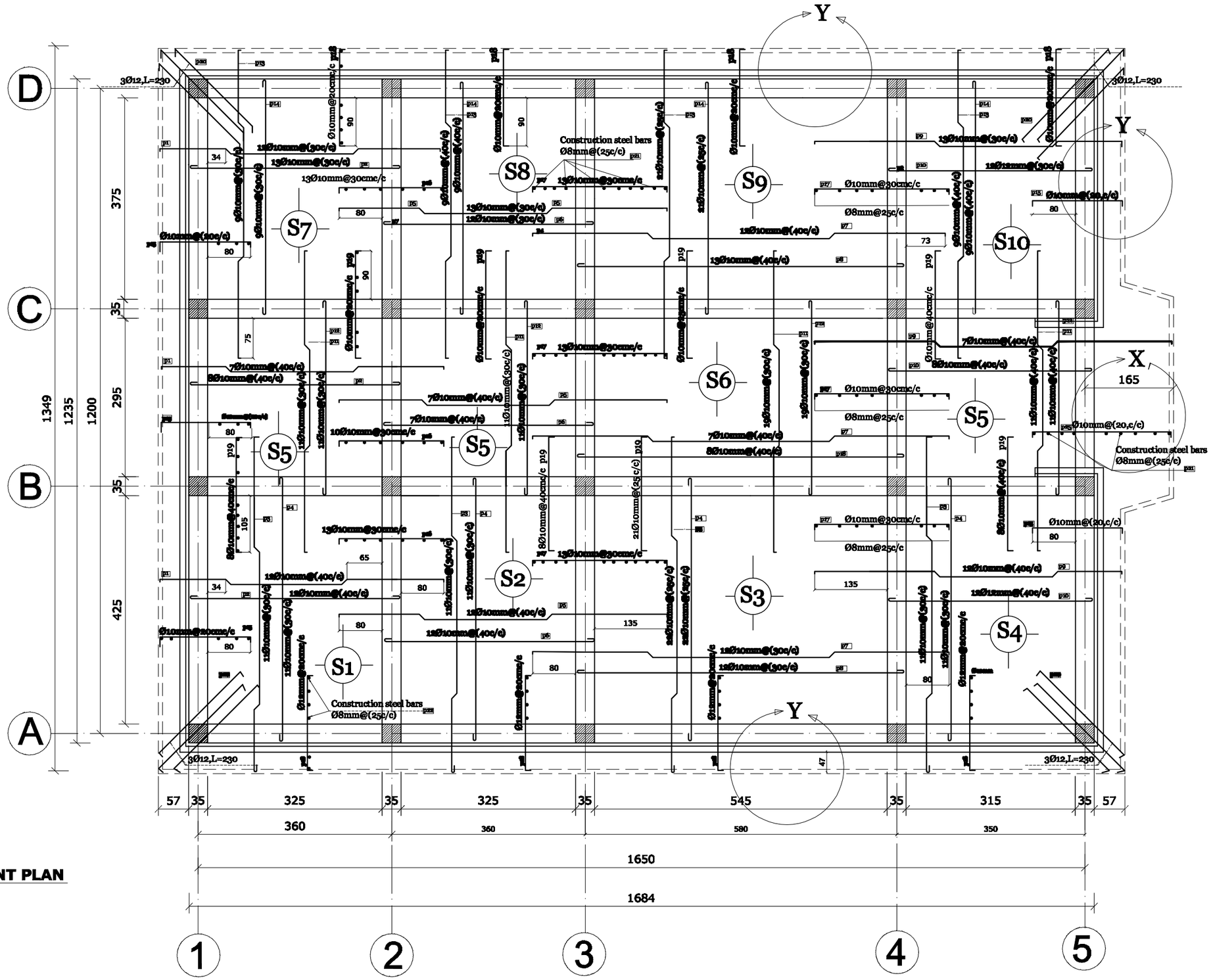

SLAB REINFORCEMENT PLAN

CAD FILE		BASIC HEALTH CLINIC (BHC)	REVISIONS					INITL.	SIG.	DATE	BASIC HEALTH CLINIC (BHC) KABUL - AFGHANISTAN	ARCHITECT BaCEAG CONSULTATIVE ENGINEERING & ARCHITECTURAL GROUP Email: baceag@yahoo.com Mobile: 0700 305 000 , 0700 304 470	CLIENT MINISTRY OF PUBLIC HEALTH AFGHANISTAN	RECIPIENT
SCALE	1:75		NO.	REVISION	NAME	INITL.	DATE	PRODUCED BY	BaCEAG		July-2008			
DRAWING NUMBER	BHC.ST-005	SLAB REINFORCEMENT PLAN						DESIGNED BY	Eng.Muradi		July-2008			
PROJECT NUMBER								CHECKED BY	Eng.A.Karim		July-2008			
								APPROVALS						
								PROJECT MANAGER						
								PROJECT DIRECTOR						

Frame -4 (3Num.)

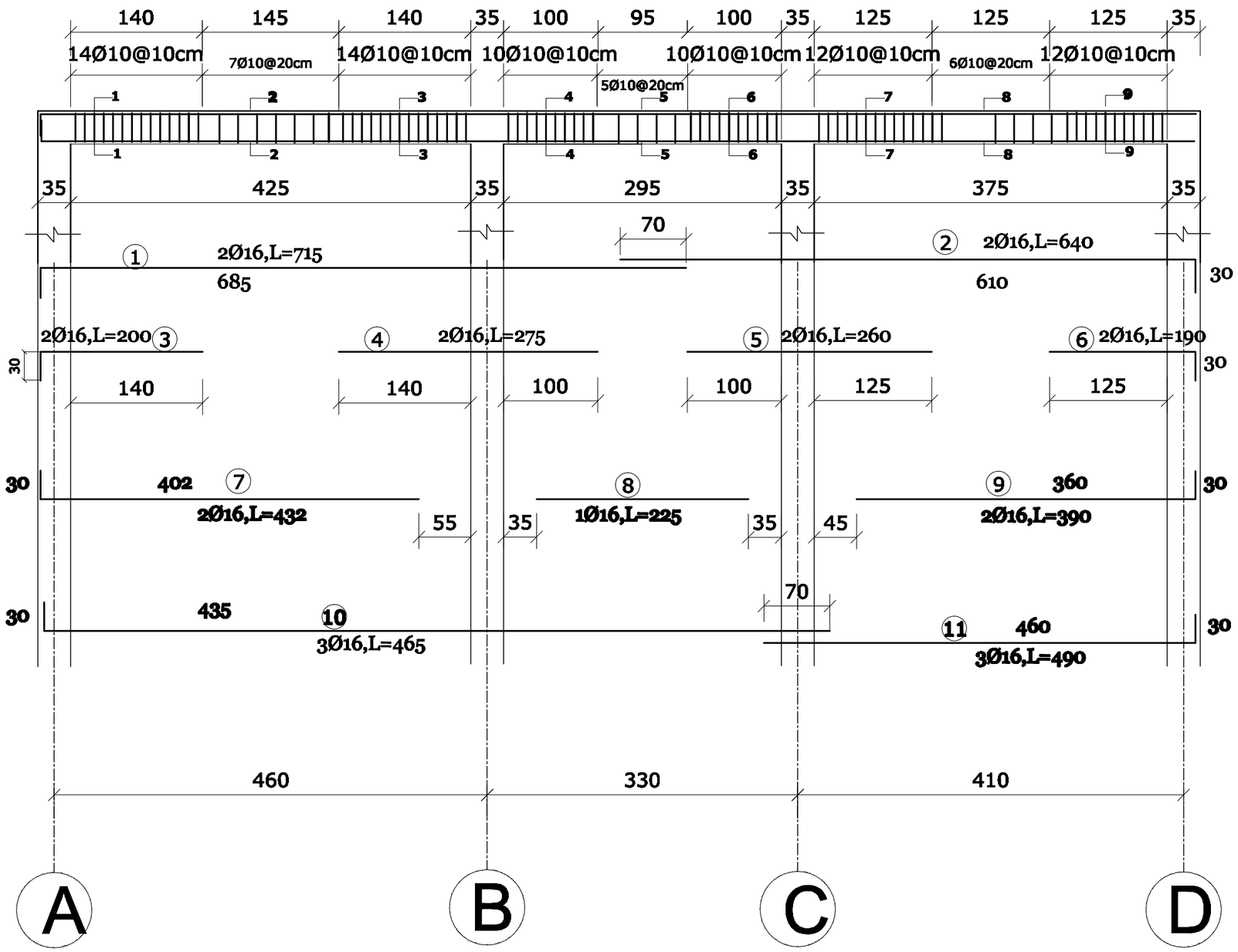

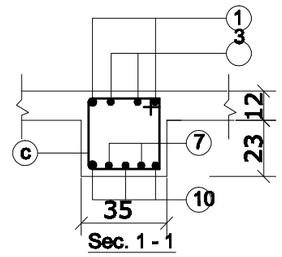

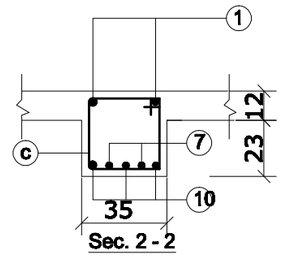

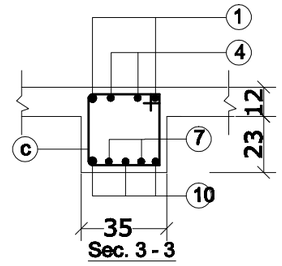

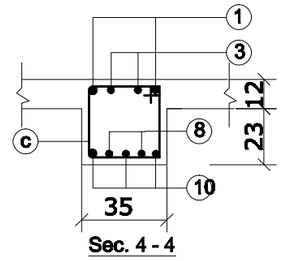

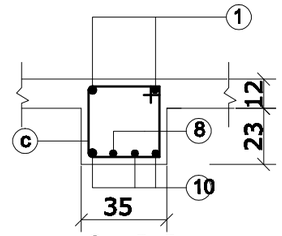

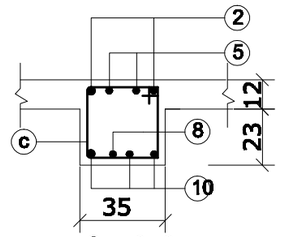

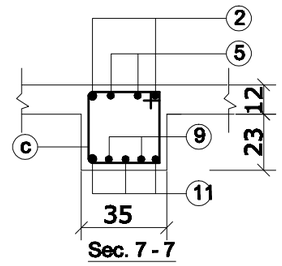

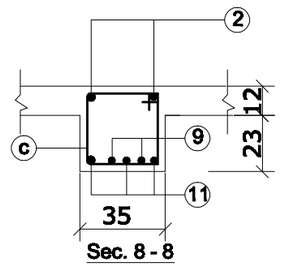

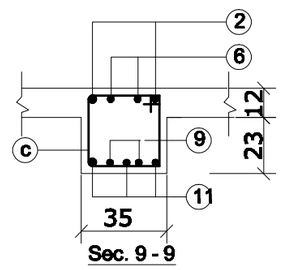

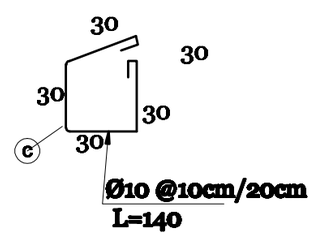

CAD FILE		BASIC HEALTH CLINIC (BHC)	REVISIONS							BASIC HEALTH CLINIC (BHC) KABUL - AFGHANISTAN	ARCHITECT BaCEAG CONSULTATIVE ENGINEERING & ARCHITECTURAL GROUP Email: baceag@yahoo.com Mobile: 0700 306 060 , 0700 304 470	CLIENT MINISTRY OF PUBLIC HEALTH AFGHANISTAN	RECIPIENT
SCALE	1;50,1:25		NO.	REVISION	NAME	INITL.	DATE		INITL	SIG.	DATE				
DRAWING NUMBER	BHC.ST-013	FRAME - 4 & SECTIONS						PRODUCED BY	BaCEAG		July-2008				
PROJECT NUMBER								DESIGNED BY	Eng.Muradi		July-2008				
								CHECKED BY	Eng.A.Karim		July-2008				
								APPROVALS							
								PROJECT MANAGER							
								PROJECT DIRECTOR							

Frame -1 (2Num.)

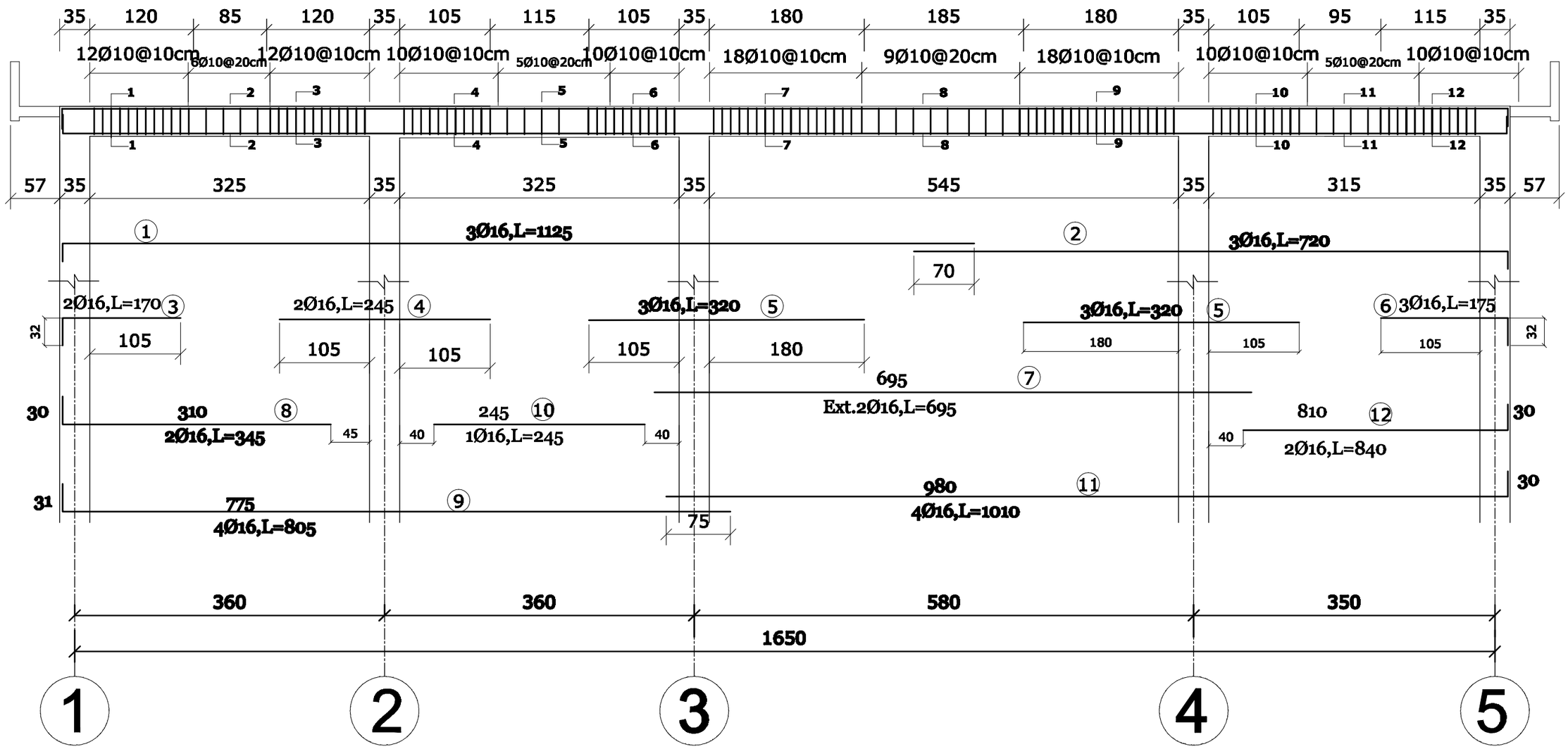

CAD FILE		BASIC HEALTH CLINIC (BHC)	REVISIONS						INITL	SIG.	DATE	BASIC HEALTH CLINIC (BHC) KABUL - AFGHANISTAN	ARCHITECT BaCEAG CONSULTATIVE ENGINEERING & ARCHITECTURAL GROUP Email: baceag@yahoo.com Mobile: 0700 300 000 , 0700 304 470	CLIENT MINISTRY OF PUBLIC HEALTH AFGHANISTAN	RECIPIENT
SCALE	1:50		NO.	REVISION	NAME	INITL.	DATE	PRODUCED BY	BaCEAG		July–2008				
DRAWING NUMBER	BHC.ST-008	FRAME - 1 REINFORCEMENT						DESIGNED BY	Eng.Muradi		July–2008				
PROJECT NUMBER								CHECKED BY	Eng.A.Karim		July–2008				
								APPROVALS							
								PROJECT MANAGER							
								PROJECT DIRECTOR							

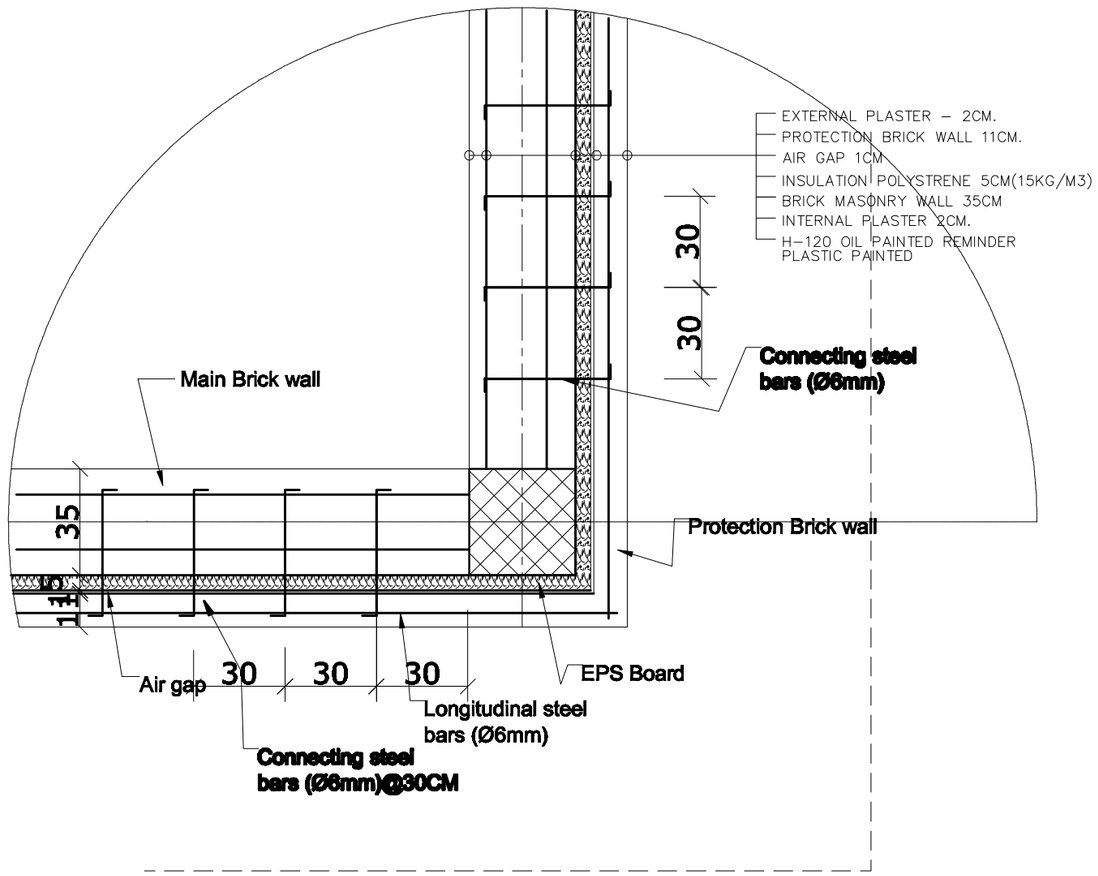

Corner Column Detail

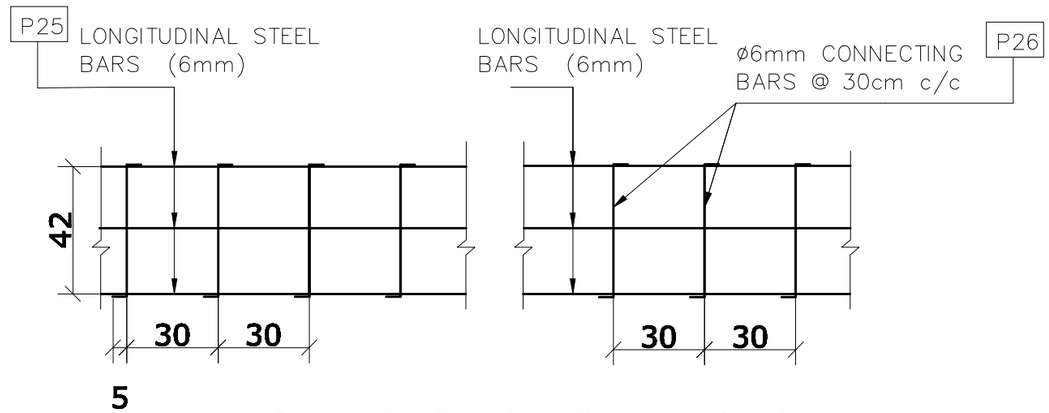

Connection Steel Bars Structure Detail

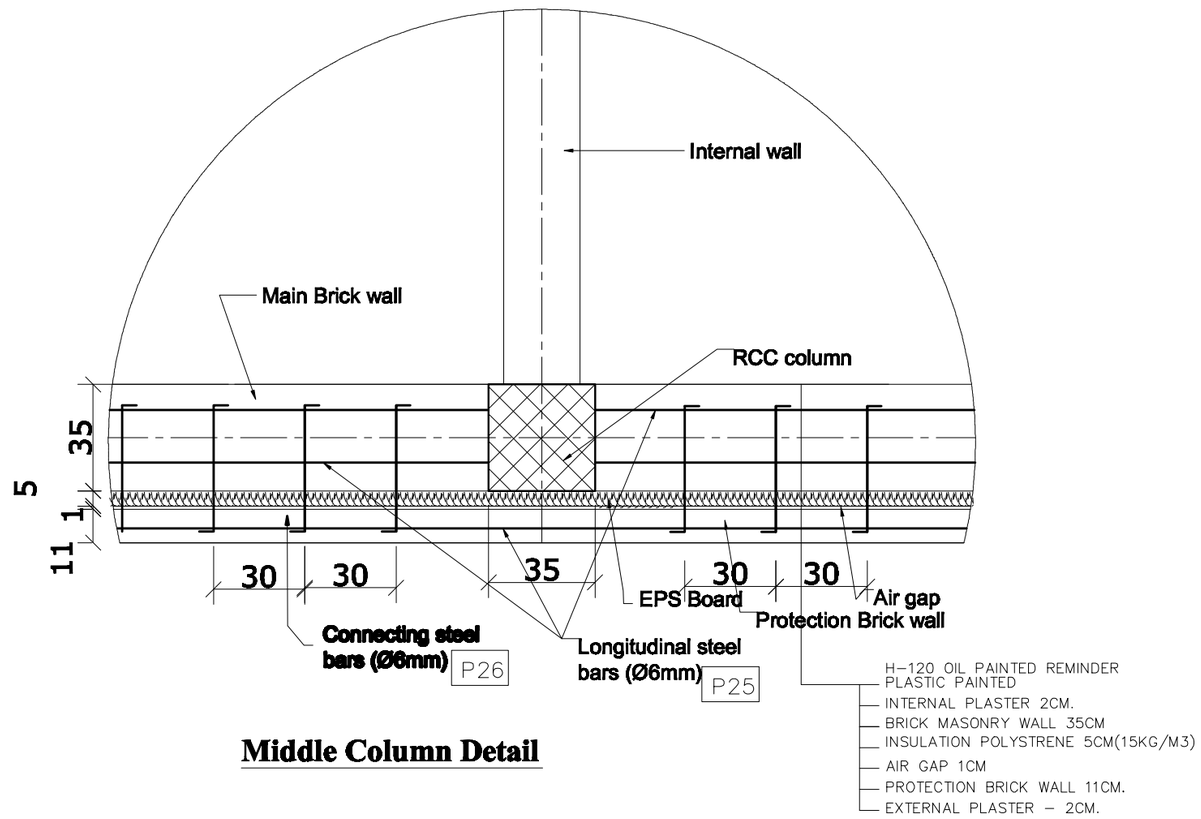

Middle Column Detail

CAD FILE		BASIC HEALTH CLINIC (BHC)	REVISIONS					INITL	SIG.	DATE	BASIC HEALTH CLINIC (BHC) KABUL - AFGHANISTAN
SCALE	1:20		NO.	REVISION	NAME	INITL.	DATE	PRODUCED BY	BaCEAG		July–2008
DRAWING NUMBER	BHC.ST-014	WALL CONNECTION DETAILS						DESIGNED BY	Eng.Muradi		July–2008
PROJECT NUMBER								CHECKED BY	Eng.A.Karim		July–2008
								APPROVALS			
								PROJECT MANAGER			
								PROJECT DIRECTOR			

ARCHITECT
BaCEAG
CONSULTATIVE ENGINEERING & ARCHITECTURAL GROUP
Email: baceag@yahoo.com
Mobile: 0700 285 080 , 0700 284 470

CLIENT
MINISTRY OF PUBLIC HEALTH
AFGHANISTAN

RECIPIENT

Frame -3 (2Num.)

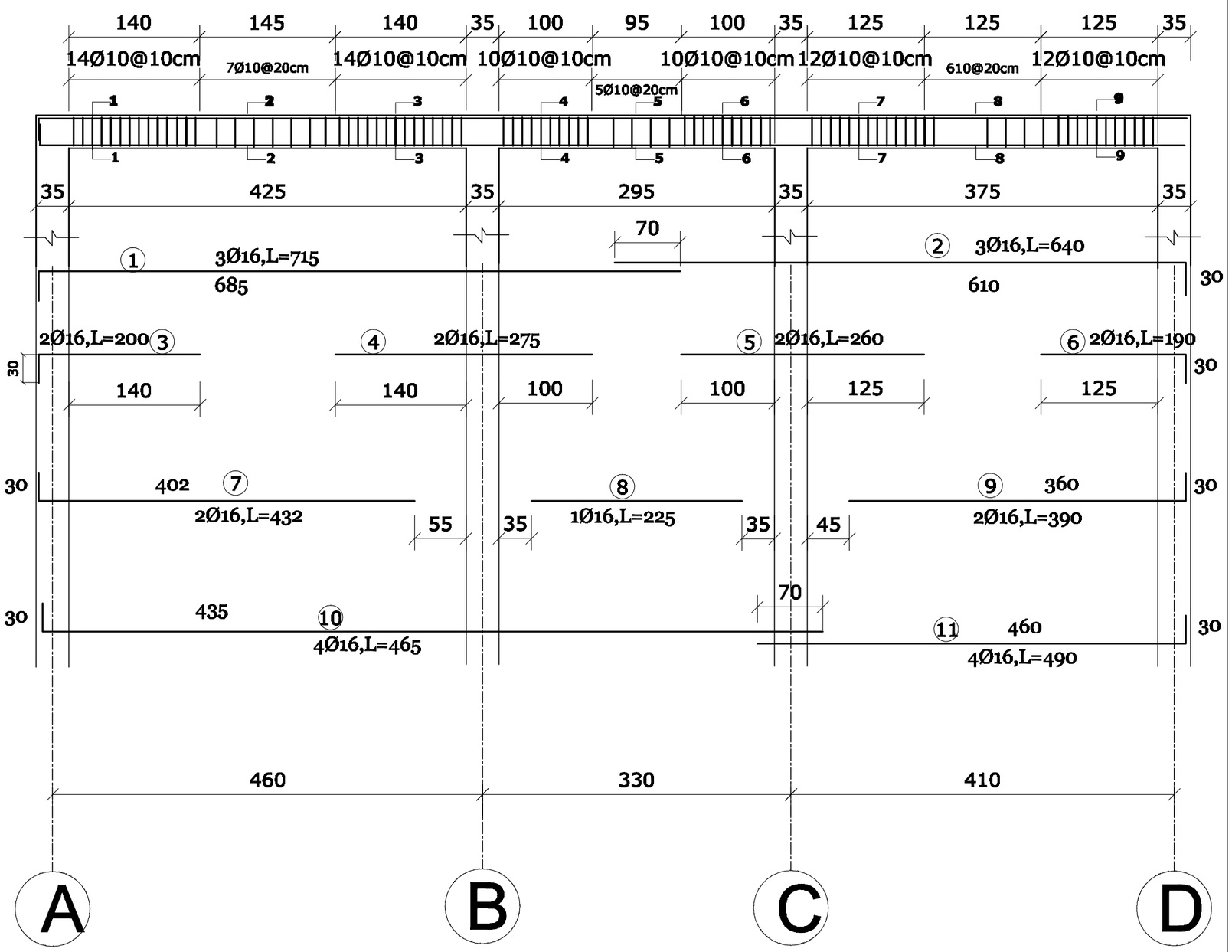

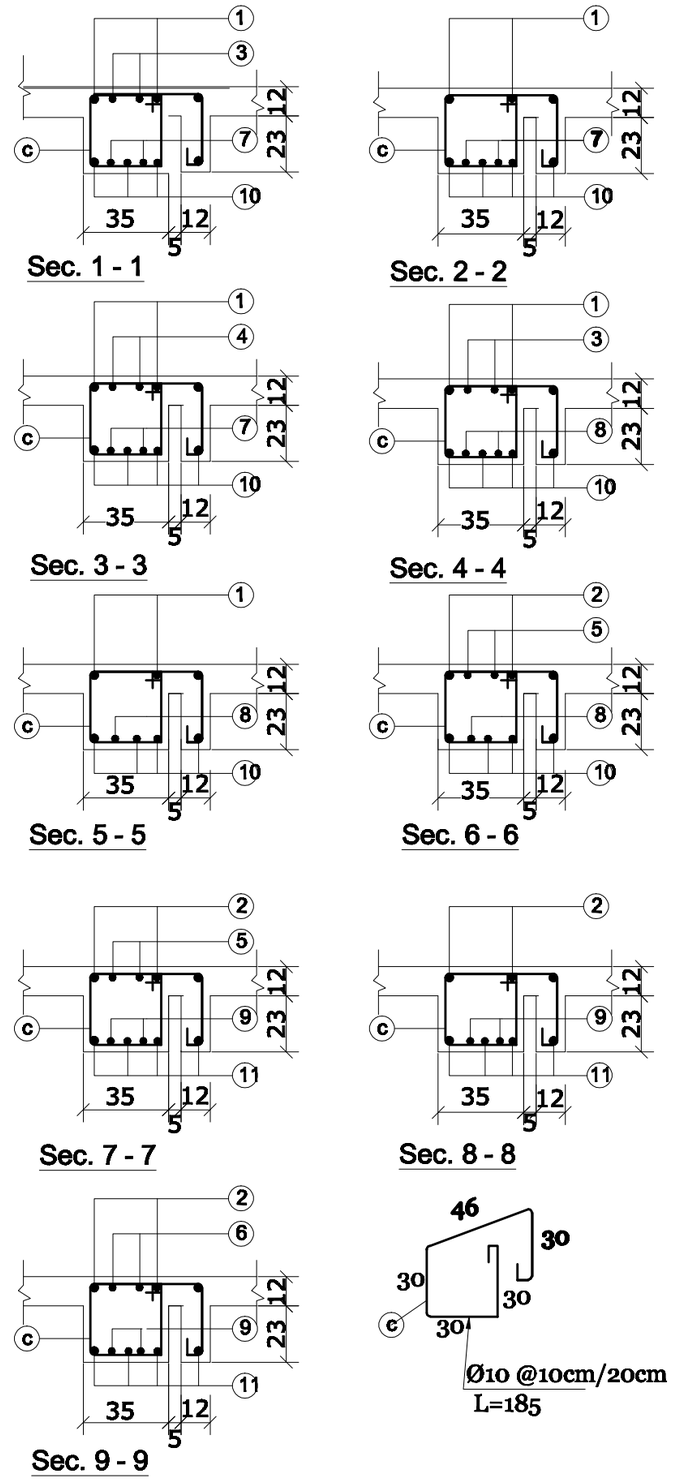

CAD FILE		BASIC HEALTH CLINIC (BHC)	REVISIONS					INITL.	SIG.	DATE	BASIC HEALTH CLINIC (BHC) KABUL - AFGHANISTAN
SCALE	1;50,1:25		NO.	REVISION	NAME	INITL.	DATE	PRODUCED BY	BaCEAG	July–2008	
DRAWING NUMBER	BHC.ST-012							DESIGNED BY	Eng.Muradi	July–2008	
PROJECT NUMBER		FRAME - 3 & SECTIONS						CHECKED BY	Eng.A.Karim	July–2008	
								APPROVALS			
								PROJECT MANAGER			
								PROJECT DIRECTOR			

ARCHITECT
BaCEAG
CONSULTATIVE ENGINEERING & ARCHITECTURAL GROUP
Email: baceag@yahoo.com
Mobile: 0700 285 088 , 0700 284 476

CLIENT
MINISTRY OF PUBLIC HEALTH
AFGHANISTAN

RECIPIENT

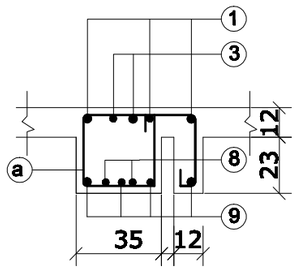

5

Sec. 1-1

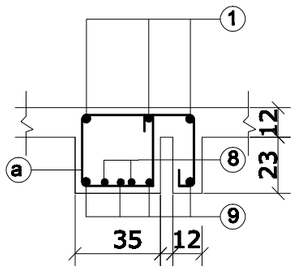

5

Sec. 2-2

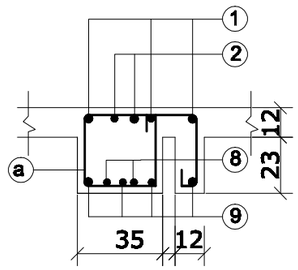

5

Sec. 3 - 3

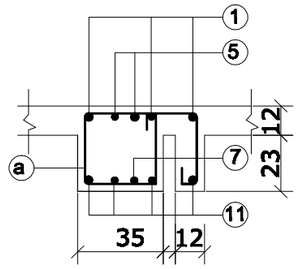

5

Sec. 7 - 7

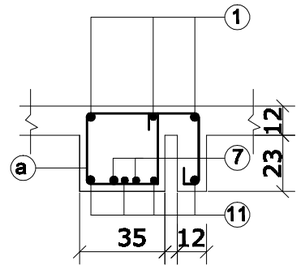

5

Sec. 8 - 8

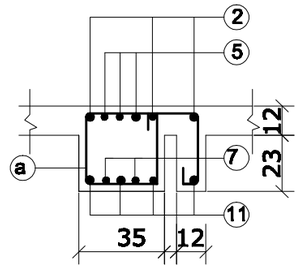

5

Sec. 9 - 9

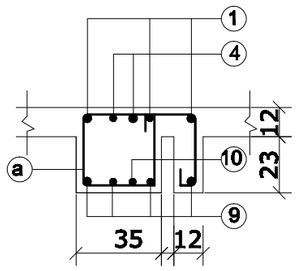

5

Sec. 4 - 4

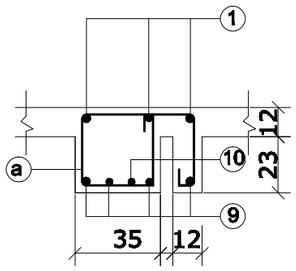

5

Sec. 5 - 5

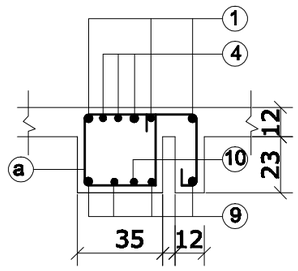

5

Sec. 6 - 6

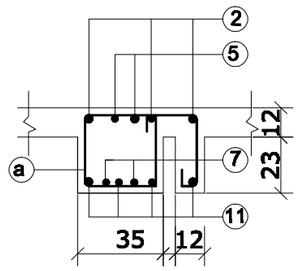

5

Sec. 10 - 10

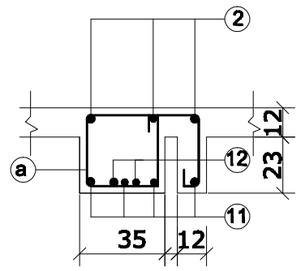

5

Sec. 11 - 11

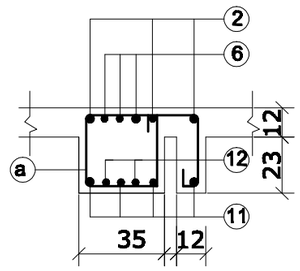

5

Sec. 12 - 12

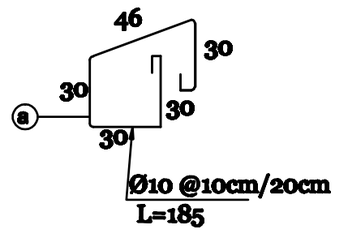

CAD FILE		BASIC HEALTH CLINIC (BHC)	REVISIONS					INITL	SIG.	DATE	BASIC HEALTH CLINIC (BHC) KABUL - AFGHANISTAN
SCALE	1:25		NO.	REVISION	NAME	INITL.	DATE	PRODUCED BY	BaCEAG	July–2008	
DRAWING NUMBER	BHC.ST-009							DESIGNED BY	Eng.Muradi	July–2008	
PROJECT NUMBER		SECTION FOR FRAME - 1						CHECKED BY	Eng.A.Karim	July–2008	
								APPROVALS			
								PROJECT MANAGER			
								PROJECT DIRECTOR			

ARCHITECT

BaCEAG
CONSULTATIVE ENGINEERING & ARCHITECTURAL GROUP

Email: baceag@yahoo.com
Mobile: 0700 325 000 , 0700 384 470

CLIENT

MINISTRY OF PUBLIC HEALTH

AFGHANISTAN

RECIPIENT

Frame - 2 (2Num.)

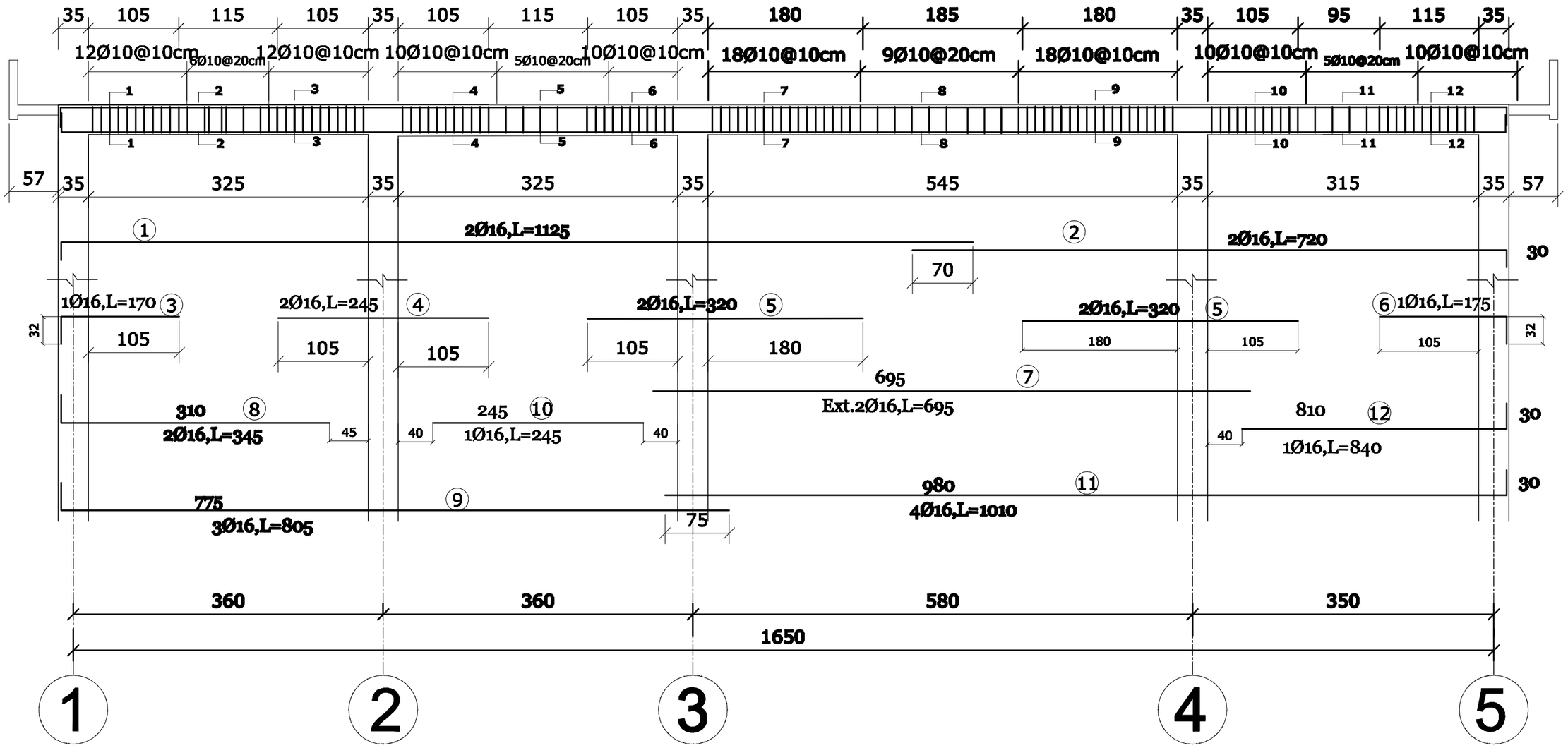

CAD FILE		BASIC HEALTH CLINIC (BHC)	REVISIONS								BASIC HEALTH CLINIC (BHC) KABUL - AFGHANISTAN	ARCHITECT BaCEAG CONSULTATIVE ENGINEERING & ARCHITECTURAL GROUP	CLIENT MINISTRY OF PUBLIC HEALTH AFGHANISTAN	RECIPIENT
SCALE	1:50		NO.	REVISION	NAME	INITL.	DATE		INITL.	SIG.	DATE			
DRAWING NUMBER	BHC.ST-010	FRAME - 2 REINFORCEMENT						PRODUCED BY	BaCEAG		July-2008			
PROJECT NUMBER								DESIGNED BY	Eng.Muradi		July-2008			
								CHECKED BY	Eng.A.Karim		July-2008			
								APPROVALS						
								PROJECT MANAGER						
								PROJECT DIRECTOR						

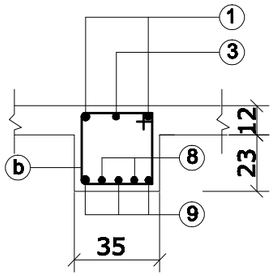

Sec. 1 - 1

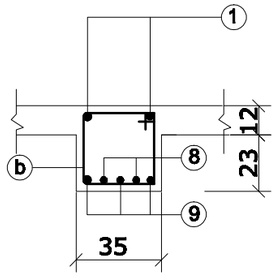

Sec. 2 - 2

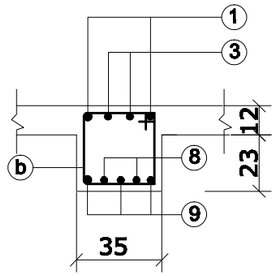

Sec. 3 - 3

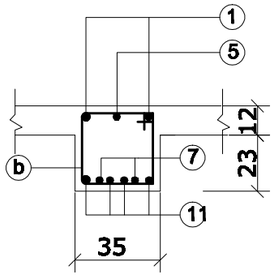

Sec. 7 - 7

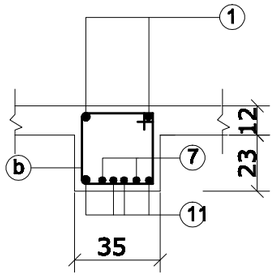

Sec. 8 - 8

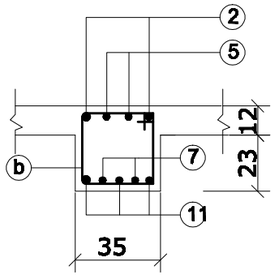

Sec. 9 - 9

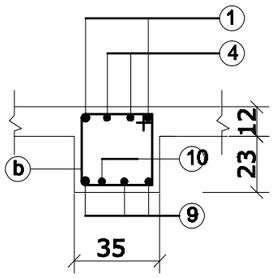

Sec. 4 - 4

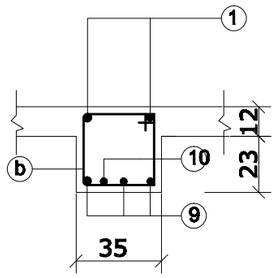

Sec. 5 - 5

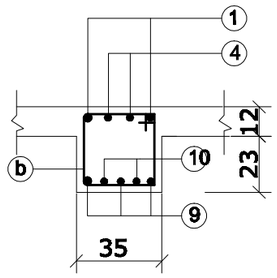

Sec. 6 - 6

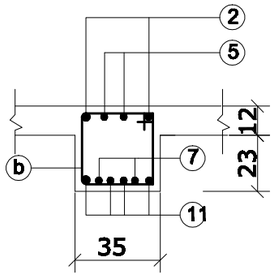

Sec. 10 - 10

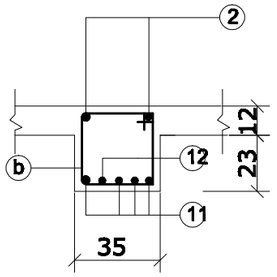

Sec. 11 - 11

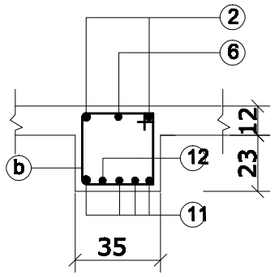

Sec. 12 - 12

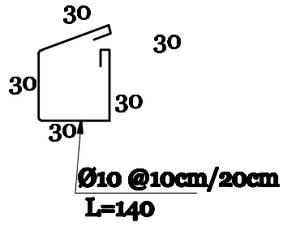

CAD FILE		BASIC HEALTH CLINIC (BHC)	REVISIONS							BASIC HEALTH CLINIC (BHC) KABUL - AFGHANISTAN	ARCHITECT BaCEAG CONSULTATIVE ENGINEERING & ARCHITECTURAL GROUP Email: baceag@yahoo.com Mobile: 0700 285 880 , 0700 284 470	CLIENT MINISTRY OF PUBLIC HEALTH AFGHANISTAN	RECIPIENT
SCALE	1:25		NO.	REVISION	NAME	INITL.	DATE		INITL	SIG.	DATE				
DRAWING NUMBER	BHC.ST-011	SECTION FOR FRAME - 2						PRODUCED BY	BaCEAG		July-2008				
PROJECT NUMBER								DESIGNED BY	Eng.Muradi		July-2008				
								CHECKED BY	Eng.A.Karim		July-2008				
								APPROVALS							
								PROJECT MANAGER							
								PROJECT DIRECTOR							

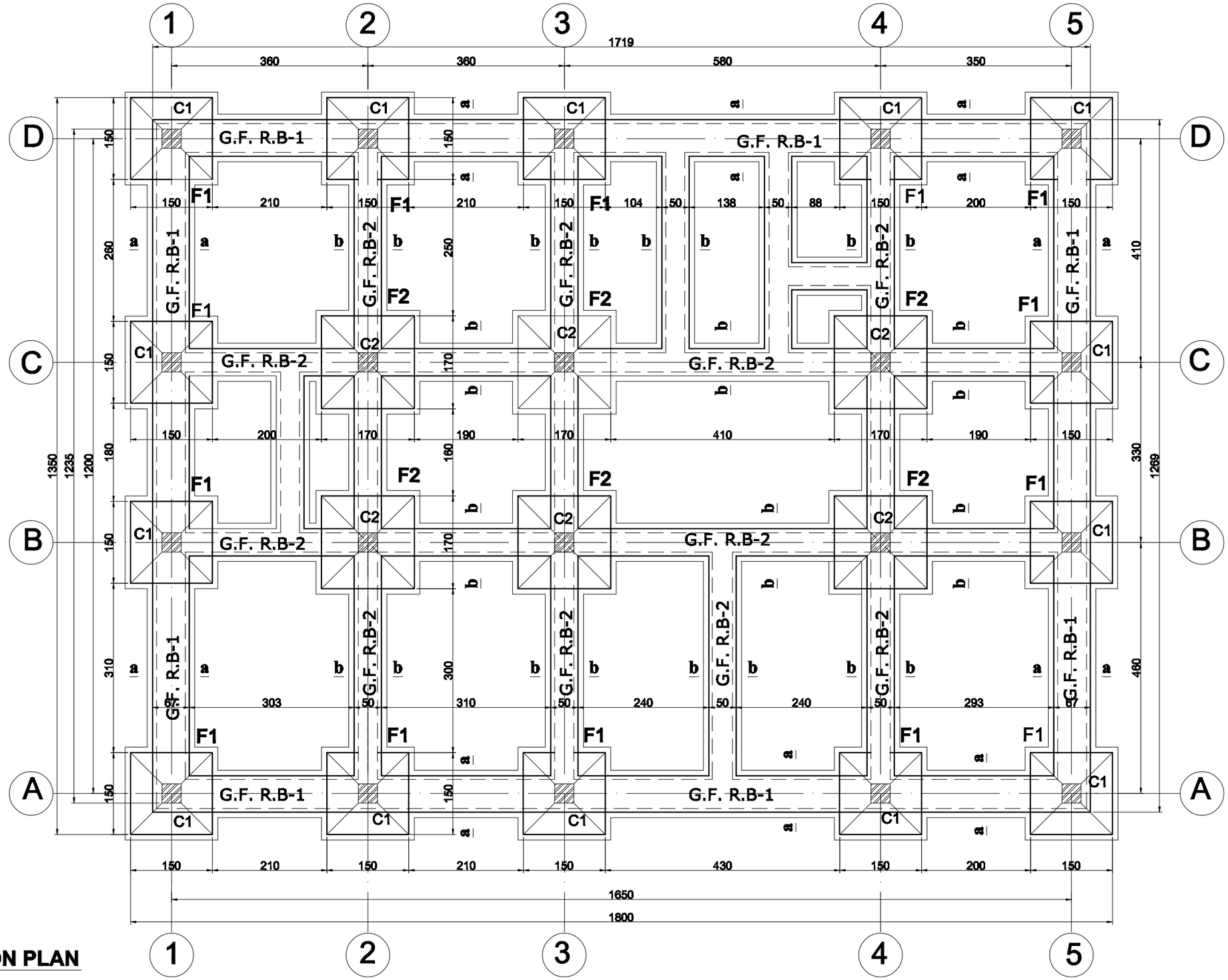

FOUNDATION PLAN

CAD FILE		BASIC HEALTH CLINIC (BHC)	REVISIONS					INITL	SIG.	DATE	BASIC HEALTH CLINIC (BHC) KABUL - AFGHANISTAN	ARCHITECT BaCEAG CONSULTATIVE ENGINEERING & ARCHITECTURAL GROUP Email: baceag@yahoo.com Mobile: 0700 300 000 , 0700 304 470	CLIENT MINISTRY OF PUBLIC HEALTH AFGHANISTAN	RECIPIENT
SCALE	1:75		NO.	REVISION	NAME	INITL.	DATE	PRODUCED BY	BaCEAG		July–2008			
DRAWING NUMBER	BHC.ST-002	FOUNDATION PLAN						DESIGNED BY	Eng.Muradi		July–2008			
PROJECT NUMBER								CHECKED BY	Eng.A.Karim		July–2008			
								APPROVALS						
								PROJECT MANAGER						
								PROJECT DIRECTOR						

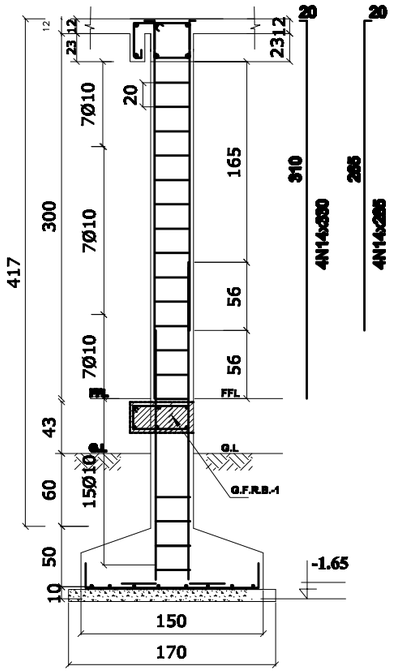

COLUMN -1 REINFORCEMENT

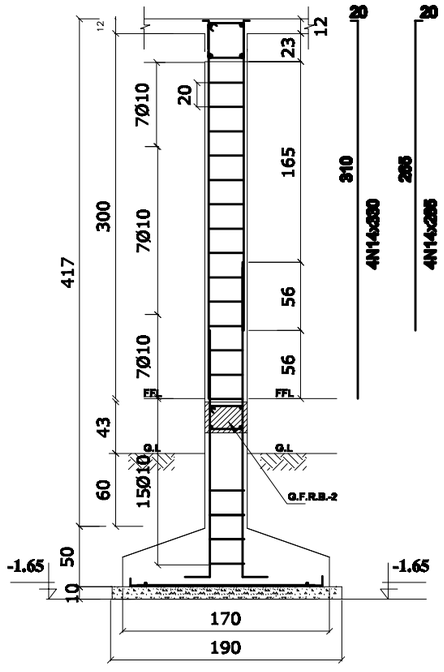

COLUMN -2 REINFORCEMENT

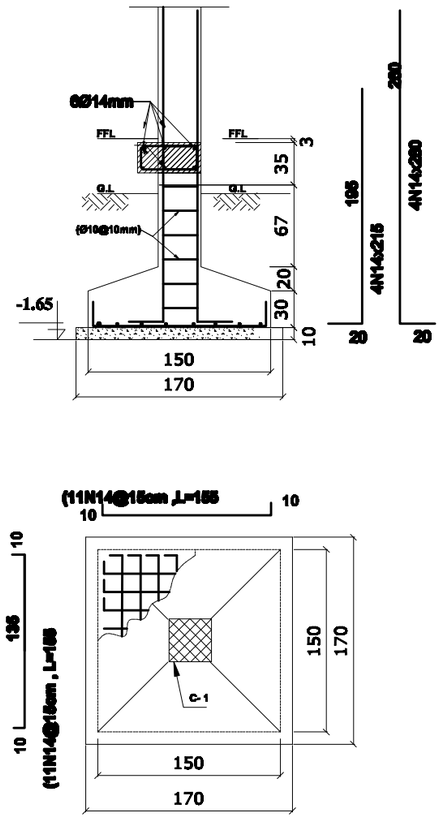

Footing No-1

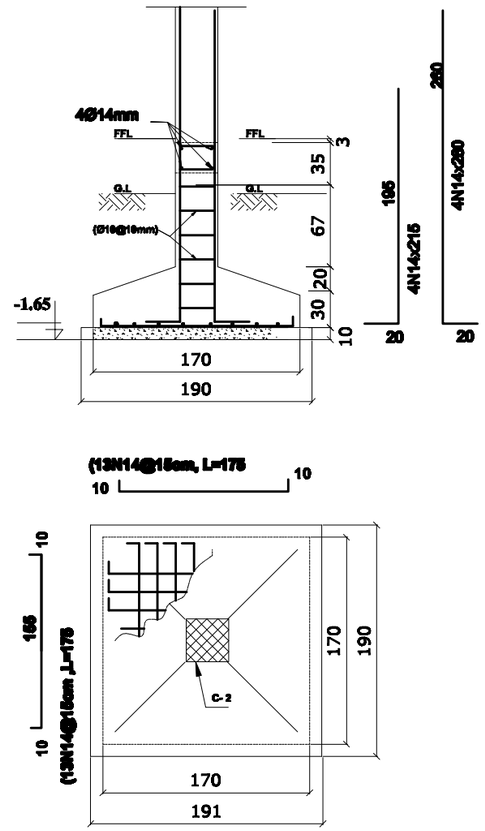

Footing No-2

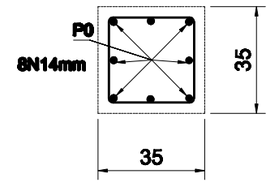

Sec. for Columns

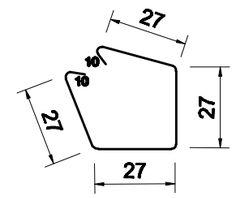

(Ø10mm,L=128cm
@20cm c/c)

CAD FILE		BASIC HEALTH CLINIC (BHC)	REVISIONS						INITL	SIG.	DATE	BASIC HEALTH CLINIC (BHC) KABUL - AFGHANISTAN
SCALE	1:50 ,1:20		NO.	REVISION	NAME	INITL.	DATE	PRODUCED BY	BaCEAG		July-2008	
DRAWING NUMBER	BHC.ST-007	COLUMNS REINFORCEMENT						DESIGNED BY	Eng.Muradi		July-2008	
PROJECT NUMBER								CHECKED BY	Eng.A.Karim		July-2008	
								APPROVALS				
								PROJECT MANAGER				
								PROJECT DIRECTOR				

ARCHITECT
BaCEAG
CONSULTATIVE ENGINEERING & ARCHITECTURAL GROUP
Email: baceag@yahoo.com
Mobile: 0799 305 605 , 0799 304 476

CLIENT
MINISTRY OF PUBLIC HEALTH
AFGHANISTAN

RECIPIENT

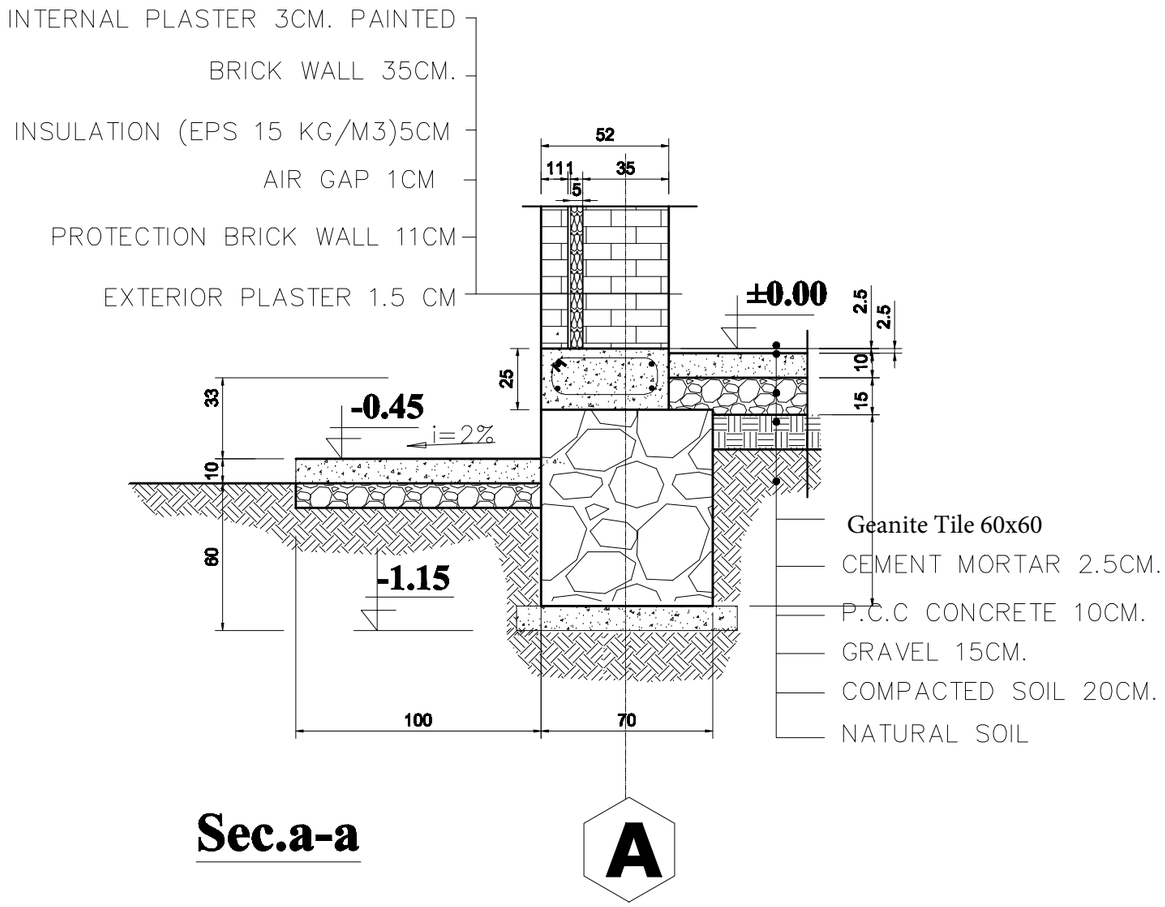

Sec.a-a

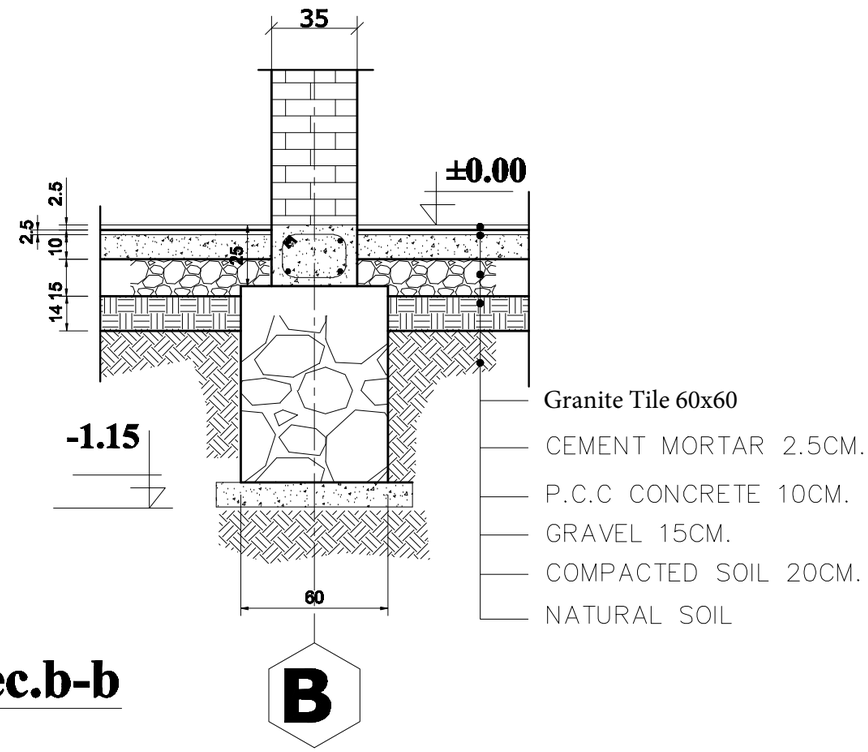

Sec.b-b

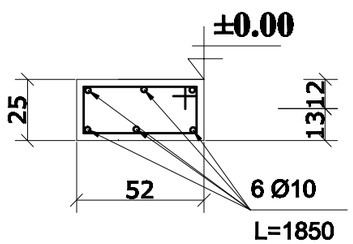

Sec. for G.L.R.B-1

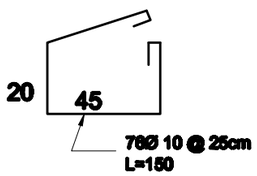

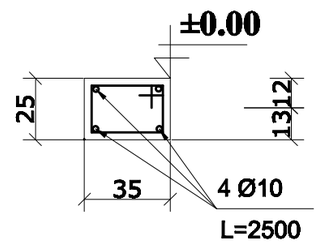

Sec. for G.L.R.B-2

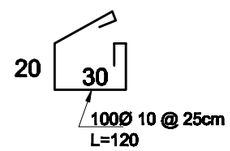

CAD FILE		BASIC HEALTH CLINIC (BHC)	REVISIONS					INITL	SIG.	DATE	BASIC HEALTH CLINIC (BHC) KABUL - AFGHANISTAN
SCALE	1:25		NO.	REVISION	NAME	INITL.	DATE	PRODUCED BY	BaCEAG		July-2008
DRAWING NUMBER	BHC.ST-003	SECTION FOR WALL & FOUNDATION						DESIGNED BY	Eng.Muradi		July-2008
PROJECT NUMBER								CHECKED BY	Eng.A.Karim		July-2008
								APPROVALS			
								PROJECT MANAGER			
								PROJECT DIRECTOR			

ARCHITECT
BaCEAG
CONSULTATIVE ENGINEERING & ARCHITECTURAL GROUP
Email: baceag@yahoo.com
Mobile: 0799 335 055 , 0799 304 475

CLIENT
MINISTRY OF PUBLIC HEALTH
AFGHANISTAN

RECIPIENT

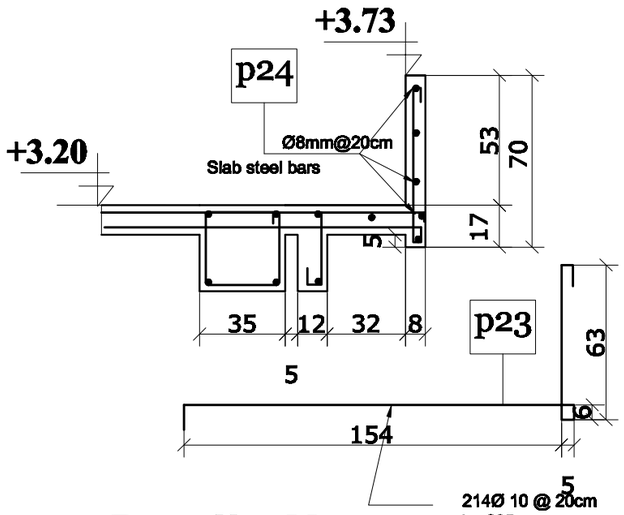

Detail - Y

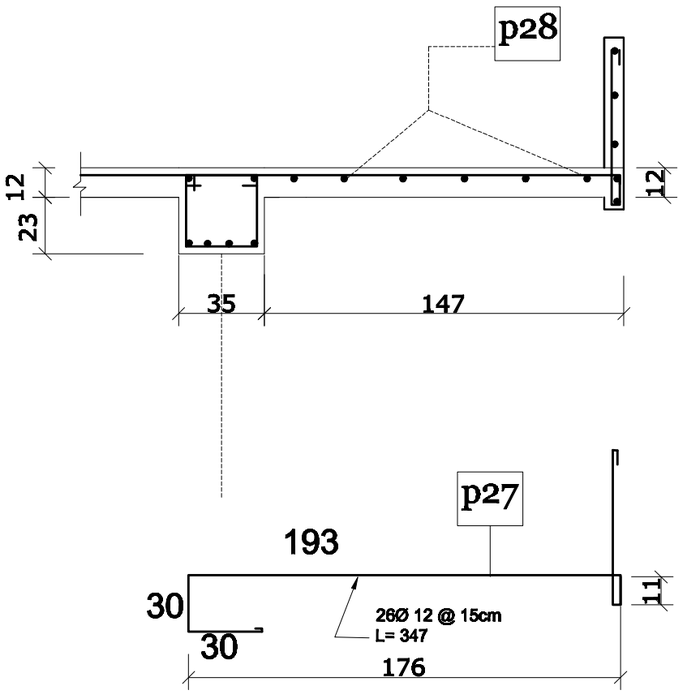

Detail - X

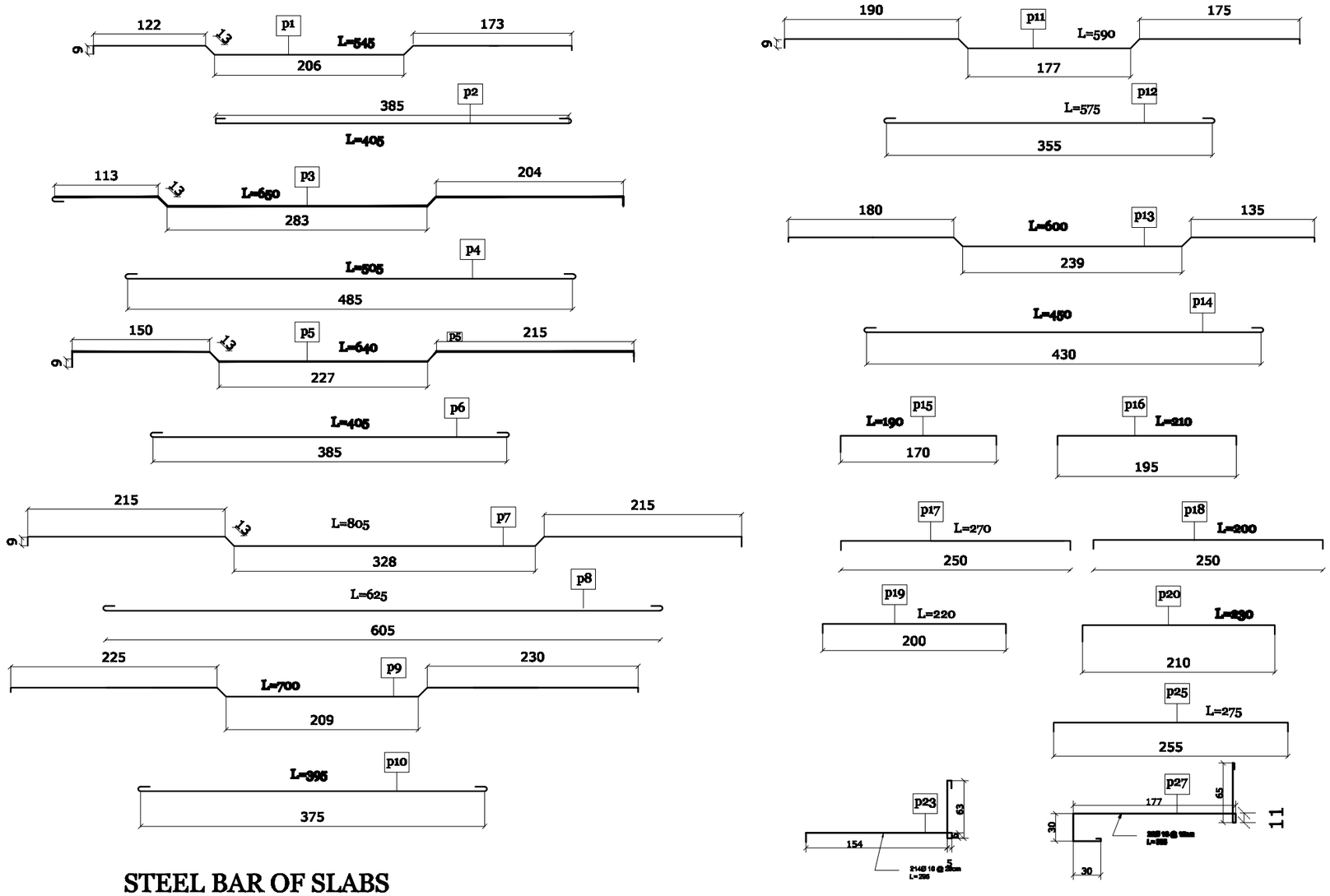

STEEL BAR OF SLABS

CAD FILE		BASIC HEALTH CLINIC (BHC)	REVISIONS					INITL	SIG.	DATE	BASIC HEALTH CLINIC (BHC) KABUL - AFGHANISTAN	ARCHITECT BaCEAG CONSULTATIVE ENGINEERING & ARCHITECTURAL GROUP Email: baceag@yahoo.com Mobile: 0799 385 655 , 0799 394 479	CLIENT MINISTRY OF PUBLIC HEALTH AFGHANISTAN	RECIPIENT
SCALE	1:25,1:50		NO.	REVISION	NAME	INITL.	DATE	PRODUCED BY	BaCEAG		July-2008			
DRAWING NUMBER	BHC.ST-006							DESIGNED BY	Eng.Muradi		July-2008			
PROJECT NUMBER		SLAB STEEL BARS DETAIL - Y						CHECKED BY	Eng.A.Karim		July-2008			
								APPROVALS						
								PROJECT MANAGER						
								PROJECT DIRECTOR						

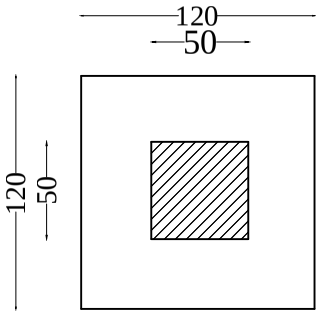

Plan of Maine Gate RCC
Colume and Footing

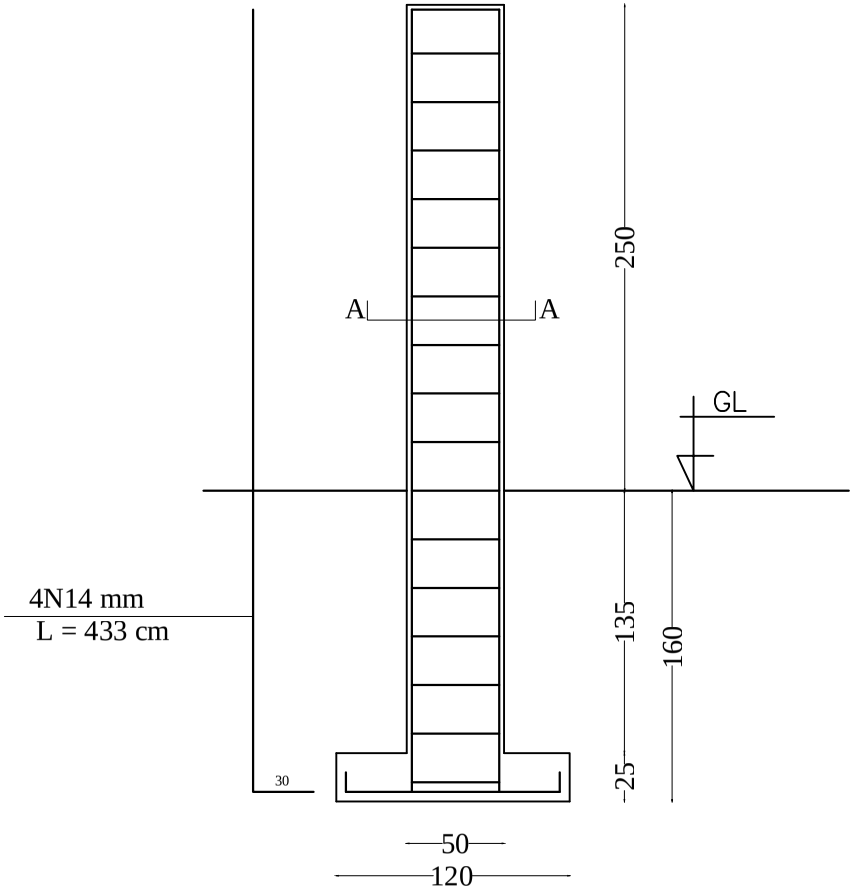

SEC-A-A

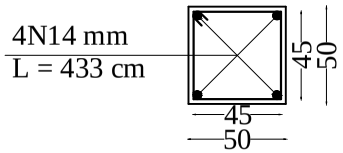

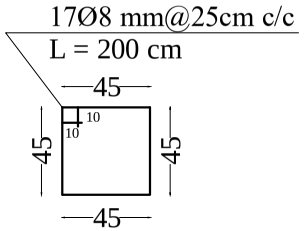

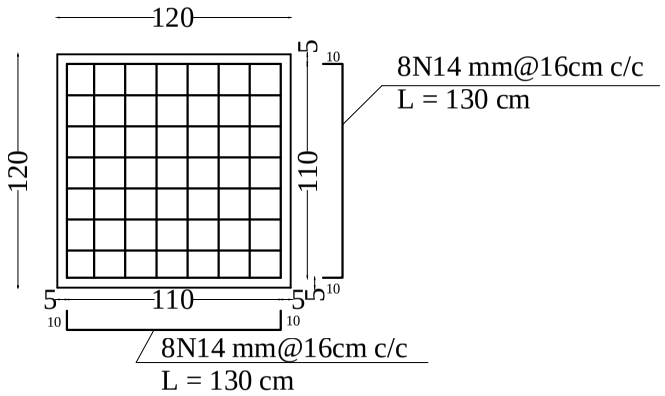

GENERAL NOTES

1. SYSTEM OF UNITS

a. ALL DIMENSIONS, SPACING ETC. ARE IN CENTIMETER
b. ALL ELEVATIONS ARE IN CENTIMETER

2. CONCRETE

a– MINIMUM COMPRESSIVE CUBE STRENGTH AT 28 DAYS OF ALL RE–INFORCED CONCRETE SHALL M250 FOR COLUMNS & FOUNDATION UNLESS OTHERWISE NOTED ON THE DRAWING,M200 FOR ALL OTHER MEMBERS OF STRUCTURE.

B– MINIMUM COMPRESSIVE CUBE STRENGTH AT 28 DAYS OF ALL BLINDING CONCRETE SHALL BE M100.

UNLESS OTHERWISE NOTED ON THE DRAWING.

3. REINFORCING STEEL

a– ALL REINFORCING STEEL FOR REINFORCED CONCRETE SHALL BE EITHER HOT ROLLED CONFORMING TO ASTM AII GRADE OR COLD WORKED STEEL CONFORMING TO AI WITH A MINIMUM PROOF STRESS OF 2700kG/cm2.

b– ALL LAP LENGTHS AND DEVELOPMENT LENGTHS OF REINFORCING BARS SHALL BE ACCORDING TO BS CODE.

c– MOLDING SHALL BE TIED TO EXTERNAL MASONRY WALLS WITH 1CMø TIES EVERY 60cm HORIZONTALLY AND VERTICALLY.(2700Kg/cm^2)

d– THE SHEAR REINFORCEMENT) IN ALL BEAMS/COLUMNS SHALL BE 2700kg/cm^2

4. CONCRETE PROTECTION TO REINFORCEMENT

MINIMUM CLEAR CONCRETE COVER TO REINFORCEMENT SHALL BE AS FOLLOW UNLESS OTHERWISE SPECIFIED ON THE DRAWING.

STRUCTURAL ELEMENT	COVER
FOOTING	7cm
SLABS,WALLS	2cm
COLUMNS & BEAMS	3cm

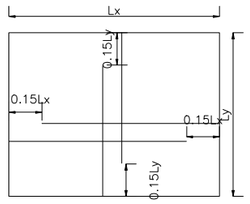

TYPICAL BOTTOM BAR ARRANGEMENT DETAILS FOR SLAB

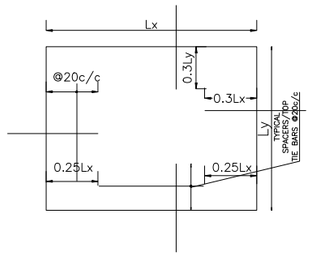

TYPICAL TOP BAR ARRANGEMENT DETAILS FOR SLAB (BOTH WAYS)

5. AGGREGATE SIZE

MAXIMUM AGGREGATE SIZE SHALL BE AS FOLLOW UNLESS OTHERWISE APPROVED BY THE ENGINEER.

STRUCTURAL ELEMENT	MAX. AGGREGATE SIZE
RAFT	7cm
SLABS,WALLS	2cm
COLUMNS & BEAMS	2cm

6. LEVELS

THE LEVELS SHOWN ON STRUCTURAL DRAWINGS ARE STRUCTURAL FLOOR LEVELS. COORDINATE LEVELS WITH ARCHITECTURAL DRAWINGS

7. CONSTRUCTION JOINT

CONSTRUCTION JOINT SHALL GENERALLY BE FOLLO–WED AS INDICATED ON THE DRAWING THE CONTRACTOR WILL USE CONSTRUCTION JOINTS ARRA–NGEMENT TO SUIT HIS REQUIREMENT WITH PRIOR APP–ROYAL OF THE ENGINEER. FOR THIS PURPOSE THE CONTRACTOR SHALL HAVE TO SUBMIT HIS PROPOSAL FOR THE APPROVAL OF THE ENGINEERS SUFFICIENTLY IN ADVANCE OF HIS SCHEDULED POURING DATE. ALL CONSTRUCTION JOINTS SHALL BE TREATED AS PER SPECIFICATIONS DIFFERENTIAL HEIGHT IN CONSTRUCTION SHALL NOT EXCEED 40 m.

8. TOP & BOTTOM REINFORCEMENT IN BEAM & RAFT

CUT LENGTH FOR TOP REINFORCEMENT SHOULD BE L/3 AND FOR BOTTOM REINFORCEMENT SHALL BE L/8 FROM SUPPORT FACE WHERE L IS CLEAR SPAN.
OR AS SHOWN IN THE DRAWINGS.

9. LOCAL ADJUSTMENT

LOCAL ADJUSTMENT TO ACCOMMODATE FIXTURUES/E–MBEDMENTS OPENINGS MAY BE MADE AT SITE BUT SUBJECT TO THE APPROVAL OF THE ENGINEER, AS LO–NG AS IT WOULD NOT MATERIALLY EFFECT THE DESIGN.

10. TOLERANCES AND DIMENSIONS

BEFORE THE FORM WORK IS LAID AT SITE THE CONTRACTOR MUST VERIFY AND CHECK OVERALL DIMENSIONS OF THE ST–RECTOR GIVEN IN THE STRUCTURAL DRAWINGS TO SEE IF THE FINISHED DIMENSION ELEVATION GIVEN ON THE DRAWING TALLY AFTER PROVIDING THE REQUIRED FINISH ENGINEER REPRESEN–DATIVE SHALL VERIFY THE MEASUREMENT OF STRUCTURAL SIZES AND ELEVATION BE RECORDED IN RELEVANT POUR STEPS TO BE PUT UP BY THE CONTRACTOR AND TO BE APPROVED BY THE ENGINEER BEFORE EXECUTION PERMISSION TO PROCEED, SHALL NOT BE GRANTED IF DEVIATIONS ARE MORE THAN PERMISSIBLE TOLERANCES.

11. TYPICAL SLAB REINFORCEMENT DETAIL

ALL SLAB CORNERS WITH MAIN SPANS ABOVE 6m SHALL HAVE EXTRA REINFORCEMENT AS INDICATED–3/4 OF MAIN REINFORCEMENT) WHERE L= LONGER SPAN

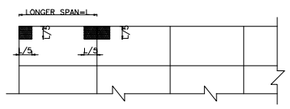

NOTE–11, FOR SLAB

DETAILING OF REINFORCEMENT

1. EMBODIMENT LENGTHS

UNLESS OTHERWISE STATED ON THE DRAWINGS, THE FO–LOWING EMBODIMENT LENGTHS SHALL BE PROVIDED.

BAR SIZE / CONCRETE STRENGTH	EMBODIMENT LENGTH IN centimeter					
	ø8	N10	N12	N14	N16	N18
250kg/cm2	20d	20d	25d	30d	35d	40d

2. SPACING

THE FIRST AND LAST BARS IN WALLS,SLABS,STIRRUPS IN BEAMS AND TIES IN COLUMNS SHOULD START AND END AT A MAXIMUM OF ONE HALF ADJACENT BAR SPACING.

3. ACCESSORIES

BAR SUPPORTS,SPACERS AND OTHER ACCESSORIES ARE NOT SHOWN ON THE DRAWING, THE RECOMMENDATION OF ACI,BS OR OTHER SUPPORTING SYSTEM AS APPROVED BY THE ENGINEER MAY BE USED(SPACERS TO BE #3@20cm c/c & NOT TO BE PROVIDED IN THE AREA WHERE NEGATIVE REINFORCEMENT EXISTS).

4. LAP LENGTH

UNLESS OTHERWISE STATED ON THE DRAWING FOLLOWING LAP LENGTHS SHALL BE PROVIDED.

BAR SIZE / CONCRETE STRENGTH	LAP LENGTHS IN centimeter					
	ø8	N10	N12	N14	N16	N18
250kg/cm	25d	30d	35d	35d	40d	40d

EXCEPT WHEN OTHERWISE SHOWN ON THE DRAWING, WHENEVER REINFORCING BARS OF DIFFERENT SIZES ARE TO BE SPLICED,LAP LENGTH SHALL BE GOVERNED BY THE SMALLER TO THE TWO BARS.

NOTE:-

THE BEARING CAPACITY OF SOIL AS PER SOIL INVESTIGATION REPORT IS TAKEN AS (1.35) kg/sq–centimeter

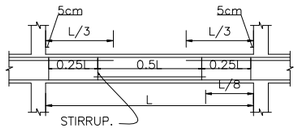

NOTE–8 FOR BEAM / RAFT
TYPICAL SPACES FOR STIRRUP

THERMAL INSULATION WORKS:-

ROOF:-

BEFORE TO FIXED THE GLASS WOOL ON SLAB. THE SLAB SHOULD BE CLEANED .
THE GLASS WOOL SHOULD BE 10CM THICK WITH ALUMINUM SHEET.
THE ALUMINUM LAYER SHOULD BE FACED ON CONCRETE SURFACE.
UNDER THE GUTTER (ON TOP OF OVER HANG) BOTH SIDE OF THE BUILDING SHOULD BE USE EPS 30KG/M3.
THE EPS SHOULD BE PRE INSTALLED ON TOP OF RCC SLAB ACCORDING TO THE DETAILS.

WALL:-

THE EXTERIOR WALLS CONTAIN AS BELOW:
MAIN BRICK WALL 35CM
POLYSTYRENE SHEET 5CM THICK
AIR GAP 1CM
THE THICKNESS OF PROTECTION BRICK WALL SHOULD BE 11CM .
JUNCTION OF THE WALL SHOULD BE AT EVERY EACH 1M HEIGHT BETWEEN PROTECTION WALL AND MAIN 35CM BRICK WALL (SEE DETAILS)

OPENING:-

THE AIR GAP SHOULD BE 1CM BETWEEN THE POLYSTYRENE SHEET (EPS) AND PROTECTION BRICK WALL.

WINDOWS AND DOORS :-

ALL EXTERNAL WINDOWS AND EXTERNAL DOORS SHOULD BE DOUBLE GLASS AND PROPERLY SEALED WITH SILICON.

NOTE:-

THE POLYSTYRENE SHEET FOR THE WALL IS WITH 5CM THICK AND 15KG/M3 DENSITY.
THE POLYSTYRENE UNDER GI SHEET ON RCC SLAB SHOULD BE 10CM THICK IN TWO OVERLAP LAYERS WITH (20–30) Kg/m3.
GLASS WOOL ON THE TOP OF RCC SLAB UNDER GI SHEET SHOULD BE 10CM THICK
VAPOR BARRIER (ALUMINUM SHEET) WILL TAKE PLACE ON RCC SLAB.
RCC FRAME ON EXTERNAL WALLS SHOULD BE ACCORDING TO ENGINEERING DRAWING AND POLYSTYRENE SHOULD BE PRE INSTALLED IN THE CONCRETE FRAME AS PER DETAILS.

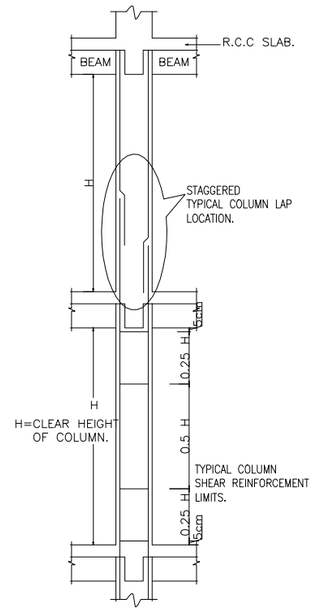

TYPICAL COLUMN REINFORCEMENT DETAIL

CAD FILE		BASIC HEALTH CLINIC (BHC)	REVISIONS								BASIC HEALTH CLINIC (BHC) KABUL - AFGHANISTAN	ARCHITECT BaCEAG CONSULTATIVE ENGINEERING & ARCHITECTURAL GROUP Email: baceag@yahoo.com Mobile: 0799 385 699 , 0799 304 470	CLIENT MINISTRY OF PUBLIC HEALTH AFGHANISTAN	RECIPIENT
SCALE	NTS		NO.	REVISION	NAME	INITL.	DATE		INITL	SIG.	DATE			
DRAWING NUMBER	BHC.ST-001	GENERAL NOTES						PRODUCED BY	BaCEAG		July–2008			
PROJECT NUMBER								DESIGNED BY	Eng.Muradi		July–2008			
								CHECKED BY	Eng.A.Karim		July–2008			
								APPROVALS						
								PROJECT MANAGER						
								PROJECT DIRECTOR						

Calculation of steel for Frames of Basic Health Clinic

SCHEDULE OF BARS

S. No	Description	length	Diameter of Item (mm)	Number of bars	Number of Item	Total length	Ø6	Ø10	Ø12	Ø14	Ø16
							Length (m)	Length (m)	Length (m)	Length (m)	Length (m)
1	*Frame-1&2*	11.25	16	3	4	135					135.00
2		7.20	16	3	4	86.40					86.40
3		1.70	16	2	4	13.60					13.60
4		2.45	16	4	4	39.20					39.20
5		3.20	16	6	4	76.80					76.80
6		1.75	16	3	4	21.00					21.00
7		6.95	16	2	4	55.60					55.60
8		3.45	16	2	4	27.60					27.60
9		8.05	16	4	4	128.80					128.80
10		2.45	16	1	4	9.80					9.80
11		10.10	16	4	4	161.60					161.60
12		8.40	16	2	4	67.20					67.20
a		1.85	10	121	4	895.40		895.4			
	Frame 3 &4										0.00
1		7.15	16	3	5	107.25					107.25
2		6.40	16	2	5	64.00					64.00
3		2.00	16	2	5	20.00					20.00
4		2.75	16	2	5	27.50					27.50
5		2.60	16	2	5	26.00					26.00
6		1.90	16	2	5	19.00					19.00
7		4.32	16	21	5	453.60					453.60
8		2.55	16	1	5	12.75					12.75
9		3.90	16	2	5	39.00					39.00
10		4.65	16	4	5	93.00					
11		4.90	16	4	5	98.00		98			
c		1.85	10	90	5	832.50		832.5			
	G.Rings-1	31.00	10	4	2	248.00		248			
						0.00					
	G.Rings-2	17.50	10	4	2	140.00		140			
		13.50	10	4	5	270.00		270			
	Columns										
	C-1	2.15	14	4	14	120.40				120.40	
		2.80	14	4	14	156.80				156.80	
		3.30	14	4	14	184.80				184.80	
		2.85	14	4	14	159.60				159.60	
	C-2	2.15	14	4	6	51.60				51.60	
		2.80	14	4	6	67.20				67.20	
		3.30	14	4	6	79.20				79.20	
		2.85	14	4	6	68.40				68.40	
	Strips fro Columns	1.30	10	36	20	936.00		936.00			
	Footings										
	F-1	1.55	14	11	14	238.70				238.70	
		1.55	14	11	14	238.70				238.70	
	F-2	1.75	14	13	6	136.50				136.50	
		1.75	14	13	6	136.50				136.50	
	TOTAL LENGTH OF BARS						**0.00**	**3419.90**	**0.00**	**1638.40**	**1591.70**
	WEIGHT PER LENGTH OF BARS IN KG						0.22	0.617	0.89	1.21	1.58
	TOTAL WEIGHT OF BARS						0.00	2110.078	0.00	1981.35	2514.12
	5% WAST FOR BAR						0.00	105.504	0.00	99.07	125.71
	TOTAL WEIGHT OF BARS						0.00	2215.582	0.00	2080.42	2639.83
	GRAND TOTAL OF WEIGHT OF BARS						**6935.83**				**Kg**

CAD FILE	
SCALE	NTS
DRAWING NUMBER	BHC.ST-016
PROJECT NUMBER	

BASIC HEALTH CLINIC (BHC)

STEEL BAR SCHEDULE

REVISIONS

NO.	REVISION	NAME	INITL.	DATE

	INITL	SIG.	DATE
PRODUCED BY	BaCEAG		July-2008
DESIGNED BY	Eng.Muradi		July-2008
CHECKED BY	Eng.A.Karim		July-2008
APPROVALS			
PROJECT MANAGER			
PROJECT DIRECTOR			

BASIC HEALTH CLINIC (BHC) KABUL - AFGHANISTAN

ARCHITECT

BaCEAG CONSULTATIVE ENGINEERING & ARCHITECTURAL GROUP

Email: baceag@yahoo.com

Mobile: 0799 285 688 , 0799 284 478

CLIENT

MINISTRY OF PUBLIC HEALTH AFGHANISTAN

RECIPIENT

Calculation of Steel for Guard Room & Toilet facility of Basic Health Clinic

SCHEDULE OF BARS

S. No	Description	length	Diameter of Item (mm)	Number of bars	Number of Item	Total length	Ø6	Ø8	Ø10	Ø12
							Length (m)	Length (m)	Length (m)	Length (m)
	Guard Room	5.15	10	10	1	51.50			51.50	
		4.05	10	10	1	40.50			40.50	
		5.05	10	10	1	50.50			50.50	
		3.90	10	10	1	39.00			39.00	
		1.80	10	5	4	36.00			36.00	
		15.50	12	6	1	93.00				93.00
		16.50	8	5	1	82.50		82.50		
	Strips									
	On top of wall	2.05	10	80	1	164.00			164.00	
	On top of wall	1.55	10	60	1	93.00			93.00	
	On Stone wall	15.00	10	4	4	240.00			240.00	
	On Stone wall	1.50	10	76	1	114.00			114.00	
	Generator Room									
	slab	3.40	10	16	1	54.40			54.40	
		2.80	10	16	1	44.80			44.80	
		1.10	10	16	4	70.40			70.40	
	Ring					0.00			0.00	
	On top of wall	11.00	10	4	4	176.00			176.00	
	On Stone wall	11.00	10	4	4	176.00			176.00	
		1.20	10	100	1	120.00			120.00	
	Toilets									
	Roof Slab	5.50	8	3	2	33.00		33.00		
		4.50	8	4	2	36.00		36.00		
		2.50	10	11	2	55.00			55.00	
		2.05	10	11	2	45.10			45.10	
		0.80	10	11	2	17.60			17.60	
		2.00	10	11	2	44.00			44.00	
		1.85	10	11	1	20.35			20.35	
		1.00	10	10	1	10.00			10.00	
	floor slab	4.70	10	7	1	32.90			32.90	
		4.65	10	7	1	32.55			32.55	
		2.95	10	11	1	32.45			32.45	
		2.95	10	11	1	32.45			32.45	
		0.95	10	7	2	13.30			13.30	
		0.70	10	11	2	15.40			15.40	
	Ring beam on the stone wall									
		14.50	10	4	1	58.00			58.00	
		1.00	8	60	1	60.00		60.00		
	on Brick wall	14.50	10	4	1	58.00			58.00	
		1.00	8	60	1	60.00		60.00		
		1.70	10	74	1	125.80			125.80	
		1.00	8	60	1	60.00		60.00		
	TOTAL LENGTH OF BARS						**0.00**	**82.50**	**828.50**	**93.00**
	WEIGHT PER LENGTH OF BARS IN KG						0.222	0.395	0.617	0.888
	TOTAL WEIGHT OF BARS						0.000	32.58	511.18	82.63
	5% WAST FOR BAR						0.000	1.63	25.56	4.13
	TOTAL WEIGHT OF BARS						0.000	34.21	536.74	86.76
	GRAND TOTAL OF WEIGHT OF BARS							**657.71**		**Kg**

Calculation of Steel for Slab of Basic Health Clinic

SCHEDULE OF BARS

S. No	Description	length (m)	Diameter of Item (mm)	Number of Item	Number of Item	Total length (m)	Ø6	Ø8	Ø10	Ø12
							Length (m)	Length (m)	Length (m)	Length (m)
	Slabs -1 -5									
P1		5.45	10		32	174.40			174.40	
P2		4.05	10		32	129.60			129.60	
P3		6.50	10		57	370.50			370.50	
P4		5.05	10		58	292.90			292.90	
P5		6.40	10		32	204.80			204.80	
P6		4.05	10		33	133.65			133.65	
P7		8.05	10		31	249.55			249.55	
P8		6.25	10		33	206.25			206.25	
P9		7.00	10		31	217.00			217.00	
P10		3.95	10		33	130.35			130.35	
P11		5.90	10		51	300.90			300.90	
P12		5.75	10		54	310.50			310.50	
P13		6.00	10		40	240.00			240.00	
P14		4.50	10		43	193.50			193.50	
P15		1.90	10		60	114.00			114.00	
P16		2.10	10		37	77.70			77.70	
P17		2.70	10		120	324.00			324.00	
P18		2.00	10		170	340.00			340.00	
P19		2.20	10		136	299.20			299.20	
P20		2.30	10		12	27.60			27.60	
P21		12.60	8		28	352.80		352.80		
P22		17.10	8		37	632.70		632.70		
P23	*Cantilever*	2.95	10		214	631.30			631.30	
P24	*Cantilever*	63.50	8		6	381.00		381.00		
P25		63.00	6	3	3	567.00	567.00			
P26	**Thermal insulation steel bars**	0.55	6		630	346.50	346.50			
						0.00				
P27	*Cantilever on Exit*	3.45	12	1	26	89.70				89.70
P28	*Cantilever on Exit*	3.85	8	1	7	26.95		26.95		
	TOTAL LENGTH OF BARS						**913.50**	**1393.45**	**4967.70**	**89.70**
	WEIGHT PER LENGTH OF BARS IN KG						0.222	0.39	0.62	0.89
	TOTAL WEIGHT OF BARS						202.91	550.25	3065.07	79.70
	5% WAST FOR BAR						10.15	27.51	153.25	3.98
	TOTAL WEIGHT OF BARS						213.05	577.76	3218.32	83.68
	GRAND TOTAL OF WEIGHT OF BARS							**4092.82**		**Kg**

CAD FILE		**BASIC HEALTH CLINIC (BHC)**	REVISIONS					INITL	SIG.	DATE	**BASIC HEALTH CLINIC (BHC) KABUL - AFGHANISTAN**
SCALE	NTS		NO.	REVISION	NAME	INITL.	DATE	PRODUCED BY	BaCEAG		July-2008
DRAWING NUMBER	BHC.ST-015							DESIGNED BY	Eng.Muradi		July-2008
								CHECKED BY	Eng.A.Karim		July-2008
PROJECT NUMBER		**STEEL BAR SCHEDULE**						APPROVALS			
								PROJECT MANAGER			
								PROJECT DIRECTOR			

ARCHITECT

BaCEAG
CONSULTATIVE ENGINEERING & ARCHITECTURAL GROUP

CLIENT

MINISTRY OF PUBLIC HEALTH

AFGHANISTAN

RECIPIENT

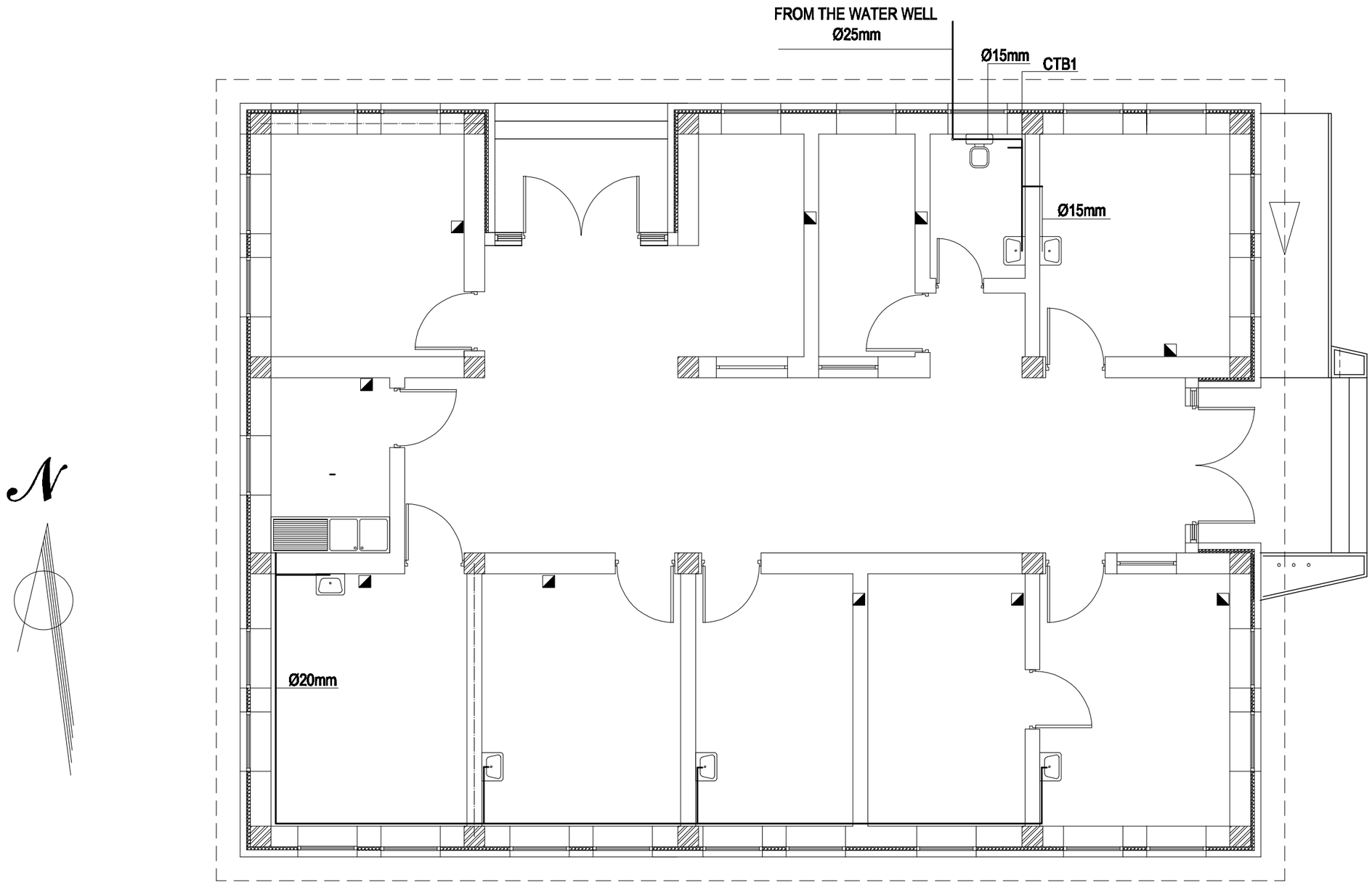

1 GROUND FLOOR COLD WATER SYSTEM
SCALE =1/75

CAD FILE		BASIC HEALTH CLINIC (BHC)	REVISIONS					INITL	SIG.	DATE	BASIC HEALTH CLINIC (BHC) KABUL - AFGHANISTAN	ARCHITECT BaCEAG CONSULTATIVE ENGINEERING & ARCHITECTURAL GROUP Email: baceag@yahoo.com Mobile: 0799 335 666 , 0799 304 476	CLIENT MINISTRY OF PUBLIC HEALTH AFGHANISTAN	RECIPIENT
SCALE	1:75		NO.	REVISION	NAME	INITL.	DATE	PRODUCED BY	BaCEAG		July-2008			
DRAWING NUMBER	BHC.WA-001	GROUND FLOOR COLD WATER SYSTEM						DESIGNED BY	Eng.A.Samad		July-2008			
PROJECT NUMBER								CHECKED BY	Eng.A.Karim		July-2008			
								APPROVALS						
								PROJECT MANAGER						
								PROJECT DIRECTOR						

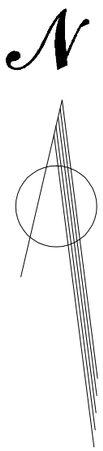

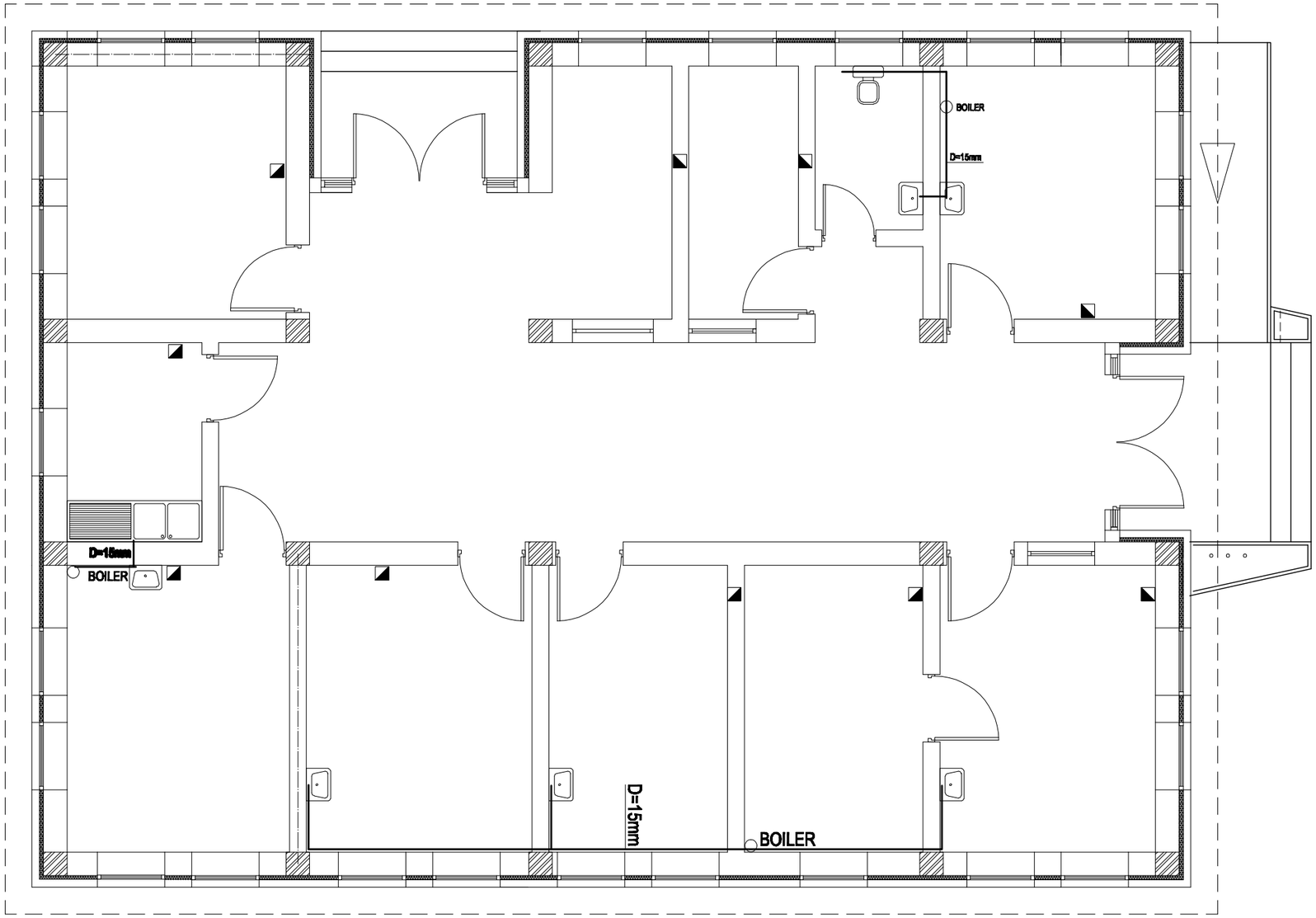

1 HOT WATER SYSTEM
SCALE =1/75

CAD FILE		**BASIC HEALTH CLINIC (BHC)**	REVISIONS					INITL	SIG.	DATE	**BASIC HEALTH CLINIC (BHC) KABUL - AFGHANISTAN**	ARCHITECT **BaCEAG CONSULTATIVE ENGINEERING & ARCHITECTURAL GROUP** Email: baceag@yahoo.com Mobile: 0799 335 666 , 0799 304 476	CLIENT **MINISTRY OF PUBLIC HEALTH AFGHANISTAN**	RECIPIENT
SCALE	1:75		NO.	REVISION	NAME	INITL.	DATE	PRODUCED BY	BaCEAG		July-2008			
DRAWING NUMBER	BHC.WA-003	**HOT WATER SYSTEM**						DESIGNED BY	Eng.A.Samad		July-2008			
PROJECT NUMBER								CHECKED BY	Eng.A.Karim		July-2008			
								APPROVALS						
								PROJECT MANAGER						
								PROJECT DIRECTOR						

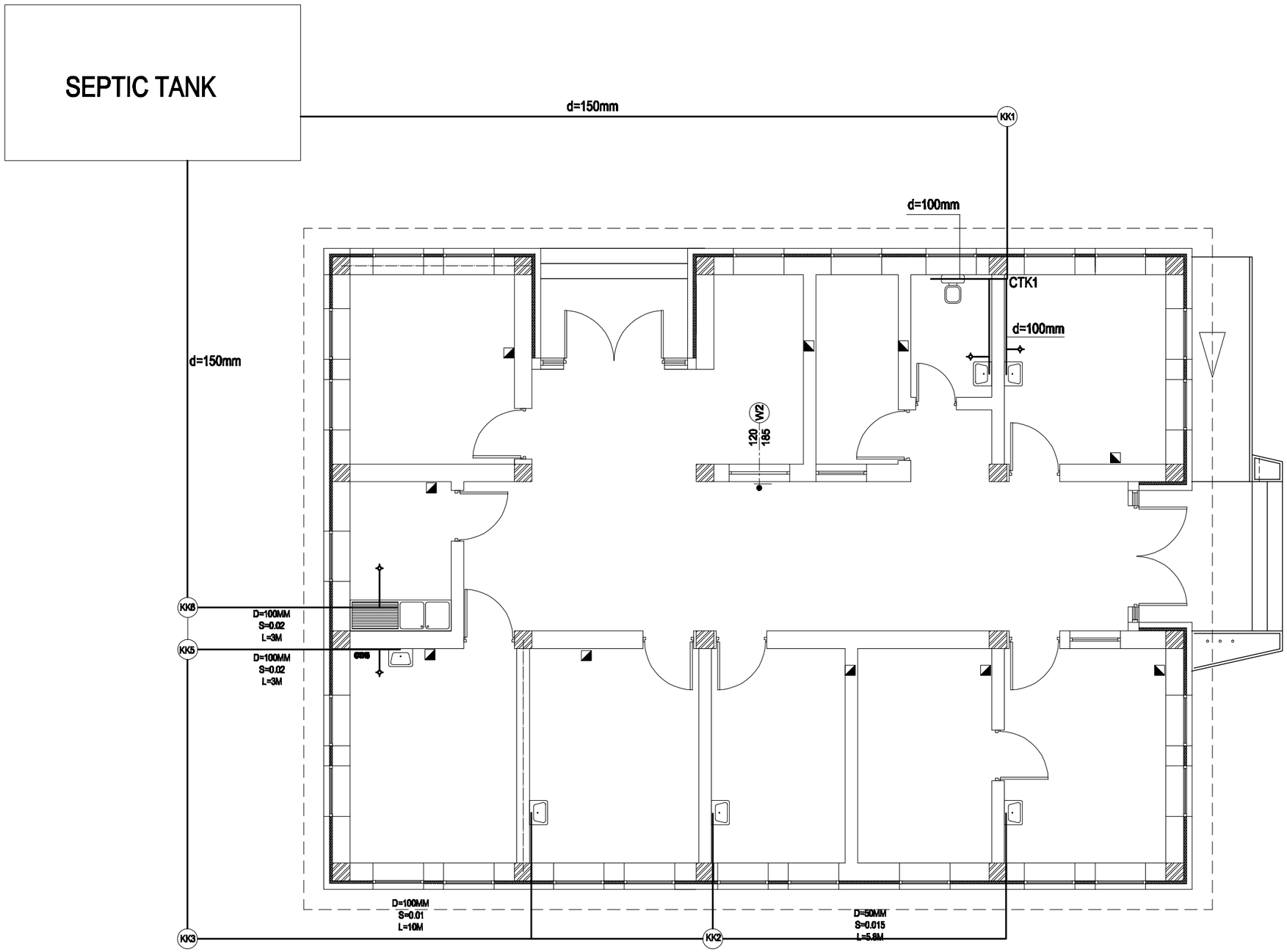

1 DRAINGE SYSTEM PLAN
SCALE =1/75

CAD FILE		BASIC HEALTH CLINIC (BHC) DRAINGE SYSTEM PLAN	REVISIONS					INITL	SIG.	DATE	BASIC HEALTH CLINIC (BHC) KABUL - AFGHANISTAN
SCALE	1:75		NO.	REVISION	NAME	INITL.	DATE	PRODUCED BY	BaCEAG		July-2008
DRAWING NUMBER	BHC.WA-002							DESIGNED BY	Eng.A.Samad		July-2008
PROJECT NUMBER								CHECKED BY	Eng.A.Karim		July-2008
								APPROVALS			
								PROJECT MANAGER			
								PROJECT DIRECTOR			

ARCHITECT
BaCEAG
CONSULTATIVE ENGINEERING & ARCHITECTURAL GROUP
Email: baceag@yahoo.com
Mobile: 0799 335 656 , 0799 304 476

CLIENT
MINISTRY OF PUBLIC HEALTH
AFGHANISTAN

RECIPIENT

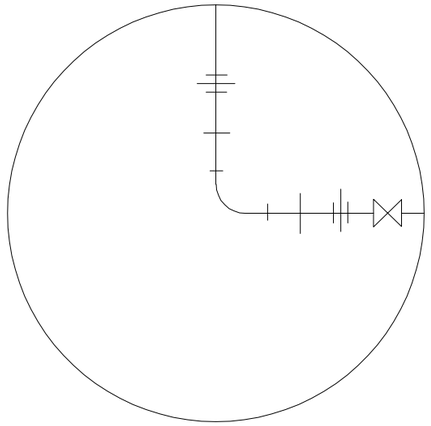

DETAIL B

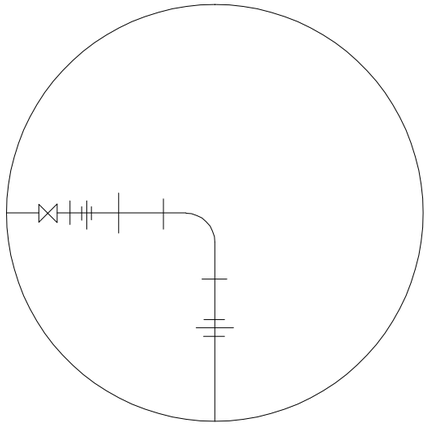

DETAIL A

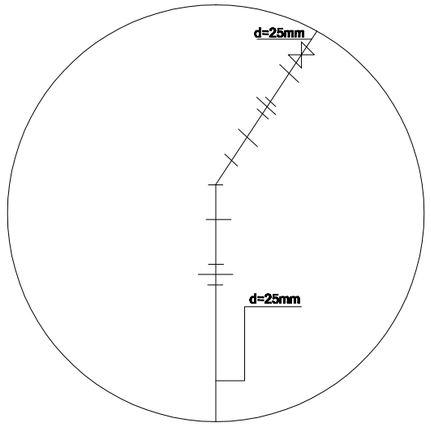

DETAIL C

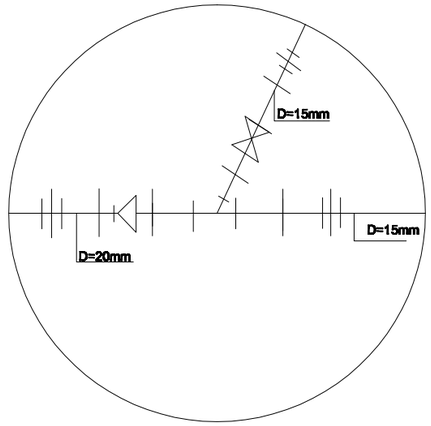

DETAIL D

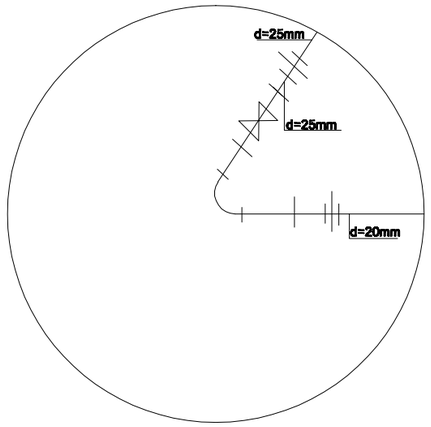

DETAIL E

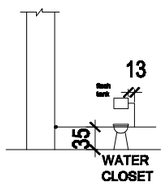

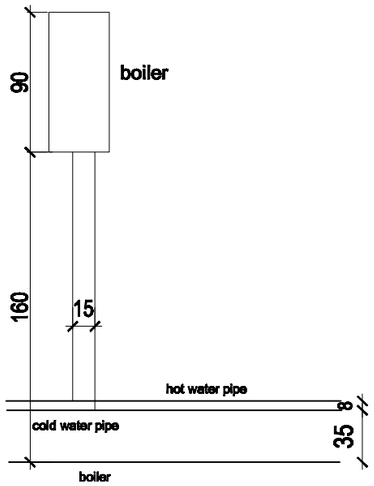

1 DETAILS
SCALE=NTS

LEGEND:

1 - union...

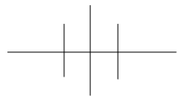

2 -joint...

3 -valve...

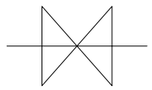

4 -Tee...

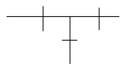

5 -Elbow...

6 -Reducer

CAD FILE		BASIC HEALTH CLINIC (BHC) DETAILS	REVISIONS					INITL	SIG.	DATE	BASIC HEALTH CLINIC (BHC) KABUL - AFGHANISTAN
SCALE	NTS		NO.	REVISION	NAME	INITL.	DATE	PRODUCED BY	BaCEAG		July-2008
DRAWING NUMBER	BHC.WA-007							DESIGNED BY	Eng.A.Samad		July-2008
PROJECT NUMBER								CHECKED BY	Eng.A.Karim		July-2008
								APPROVALS			
								PROJECT MANAGER			
								PROJECT DIRECTOR			

ARCHITECT
BaCEAG
CONSULTATIVE ENGINEERING & ARCHITECTURAL GROUP
Email: baceag@yahoo.com
Mobile: 0799 335 666 , 0799 304 476

CLIENT
MINISTRY OF PUBLIC HEALTH
AFGHANISTAN

RECIPIENT

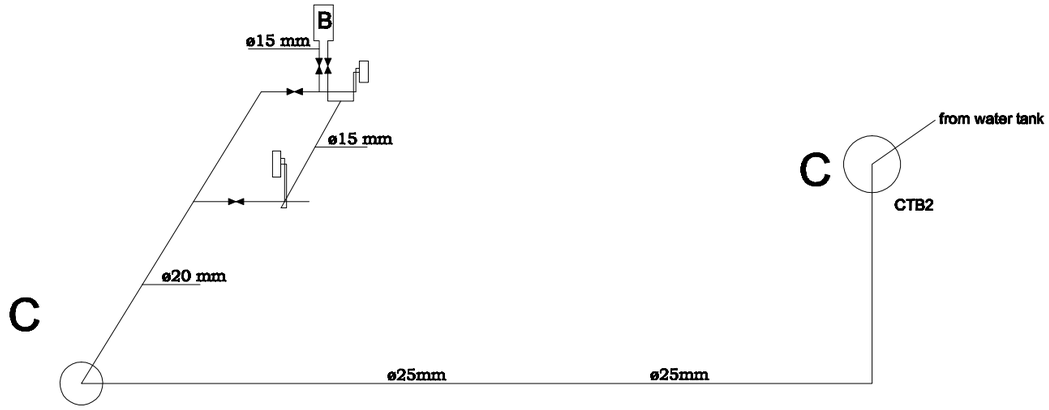

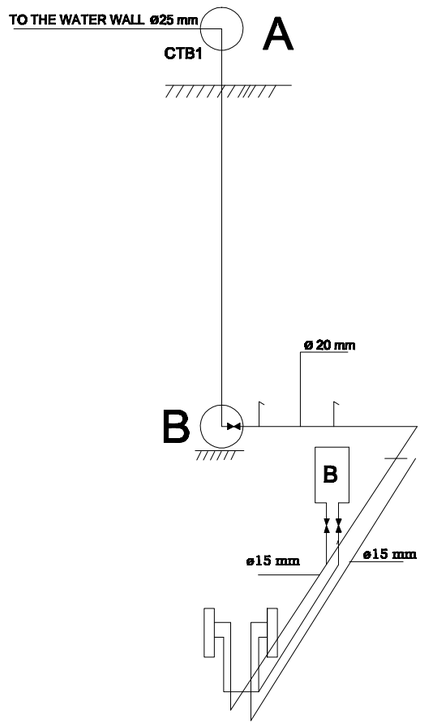

LEGEND:

1 - cold water piping...

2 -Hot water piping...

3 -Water closet...

4 -Lavatory...

5 -Boiler...

6 -Valve ....

1 GROUND FLOOR ISO.WATERSUPPLY.SCHEME
SCALE = 1/80

CAD FILE		BASIC HEALTH CLINIC (BHC)	REVISIONS					INITL	SIG.	DATE	BASIC HEALTH CLINIC (BHC) KABUL - AFGHANISTAN
SCALE	1:75		NO.	REVISION	NAME	INITL.	DATE	PRODUCED BY	BaCEAG		July-2008
DRAWING NUMBER	BHC.WA-008	GROUND FLOOR ISO. WATERSUPPLY.SCHEME						DESIGNED BY	Eng.A.Samad		July-2008
PROJECT NUMBER								CHECKED BY	Eng.A.Karim		July-2008
								APPROVALS			
								PROJECT MANAGER			
								PROJECT DIRECTOR			

ARCHITECT
BaCEAG
CONSULTATIVE ENGINEERING & ARCHITECTURAL GROUP
Email: baceag@yahoo.com
Mobile: 0799 335 666 , 0799 304 476

CLIENT
MINISTRY OF PUBLIC HEALTH
AFGHANISTAN

RECIPIENT

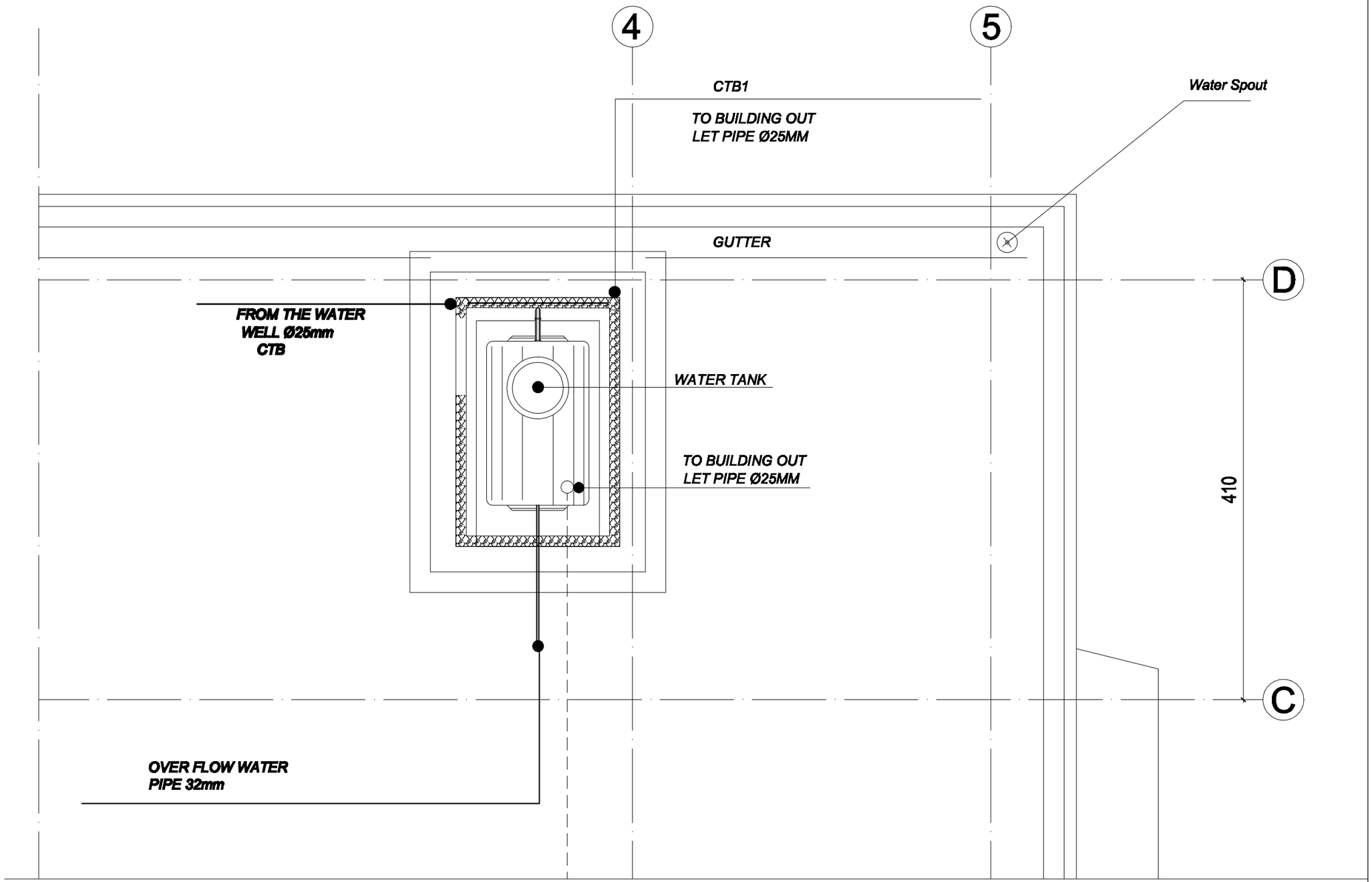

1 WATER TANK
SCALE= 1/40

CAD FILE		BASIC HEALTH CLINIC (BHC)	REVISIONS					INITL	SIG.	DATE	BASIC HEALTH CLINIC (BHC) KABUL - AFGHANISTAN
SCALE	1:40		NO.	REVISION	NAME	INITL.	DATE	PRODUCED BY	BaCEAG		July-2008
DRAWING NUMBER	BHC.WA-005	WATER TANK SCALE= 1/40						DESIGNED BY	Eng.A.Samad		July-2008
PROJECT NUMBER								CHECKED BY	Eng.A.Karim		July-2008
								APPROVALS			
								PROJECT MANAGER			
								PROJECT DIRECTOR			

ARCHITECT
BaCEAG
CONSULTATIVE ENGINEERING & ARCHITECTURAL GROUP
Email: baceag@yahoo.com
Mobile: 0799 335 666 , 0799 304 476

CLIENT
MINISTRY OF PUBLIC HEALTH
AFGHANISTAN

RECIPIENT

PLAN OF SEPTIC TANK

S1:100

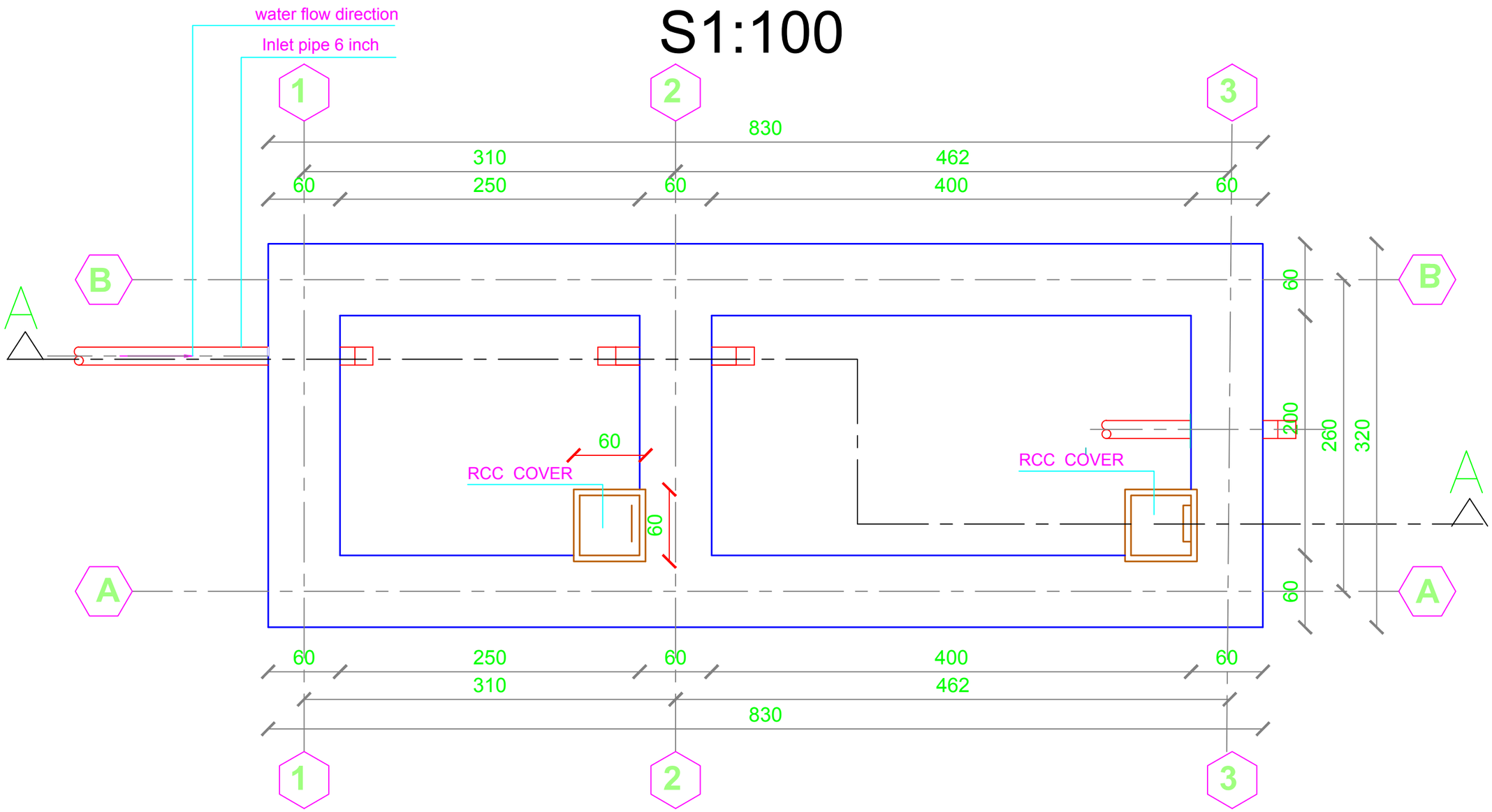

UNHCR The UN Refugee Agency | Afghanistan

NEMROZ BHC- PROJECT

Project Code	NRZ–000–000
Project Title	New Construction of Septic Tank
Drawing Title	Plan
Project Location	Nemroz BHC–Project

	Drawn By:	Designed By:	Checked By:	Reveiw By:	Approved By:	Sheet No:
Name	Eng.Amir M.	Eng.Amir M.				00 of 00
Sign						Scales:

SEPTIC TANK SECTION A-A
S1:100

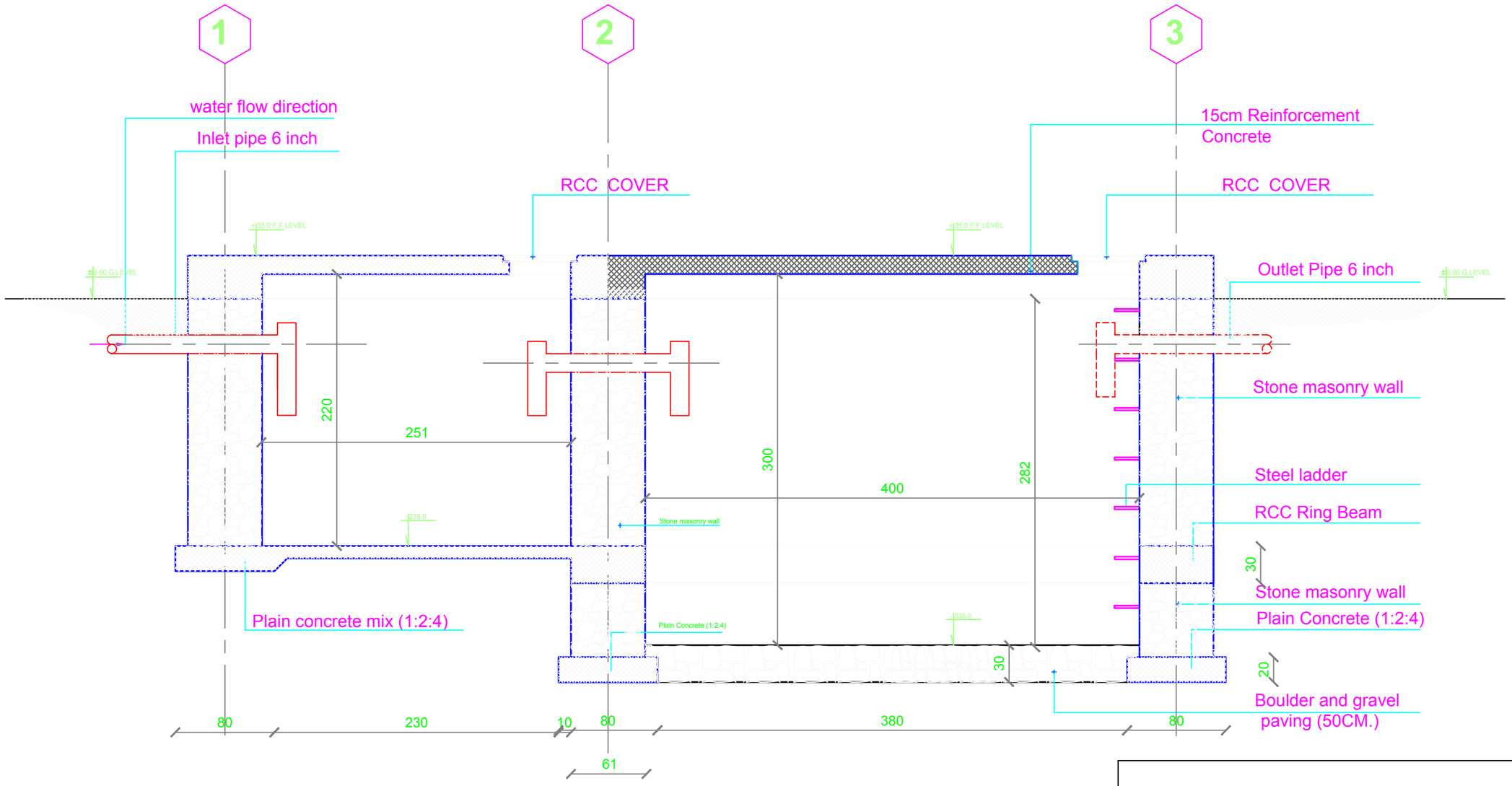

UNHCR | Afghanistan

NEMROZ BHC- PROJECT

Project Code	NRZ–000–000
Project Title	New Construction of Septic Tank
Drawing Title	Plan
Project Location	Nemroz City BHC–Project

	Drawn By:	Designed By:	Checked By:	Reveiw By:	Approved By:	Sheet No:
Name	Eng.Amir M.	Eng.Amir M.				00 of 00
Sign						Scales:
Date						1:100

Bar Bending Schedule Of Septic Tank Slab

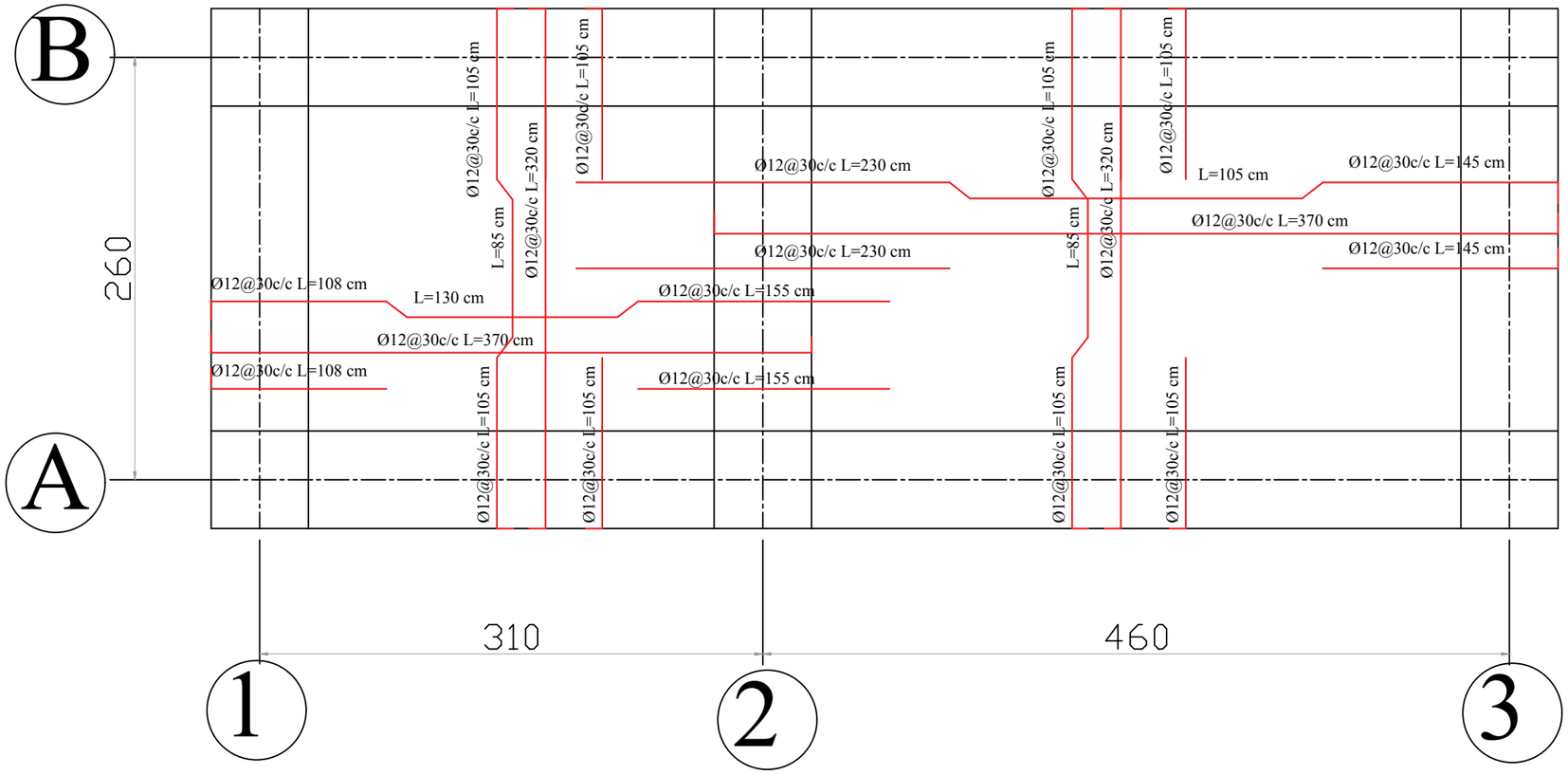

UNHCR The UN Refugee Agency | Afghanistan

NEMROZ BHC- PROJECT

Project Code	NRZ–000–000
Project Title	New Construction of Septic Tank For BHC
Drawing Title	Plan
Project Location	Nemroz City BHC–Project

	Drawn By:	Designed By:	Checked By:	Reveiw By:	Approved By:	Sheet No:
Name	Eng.Amir M.	Eng.Amir M.				00 of 00
Sign						Scales:
						1:100

Digging bore well by local method

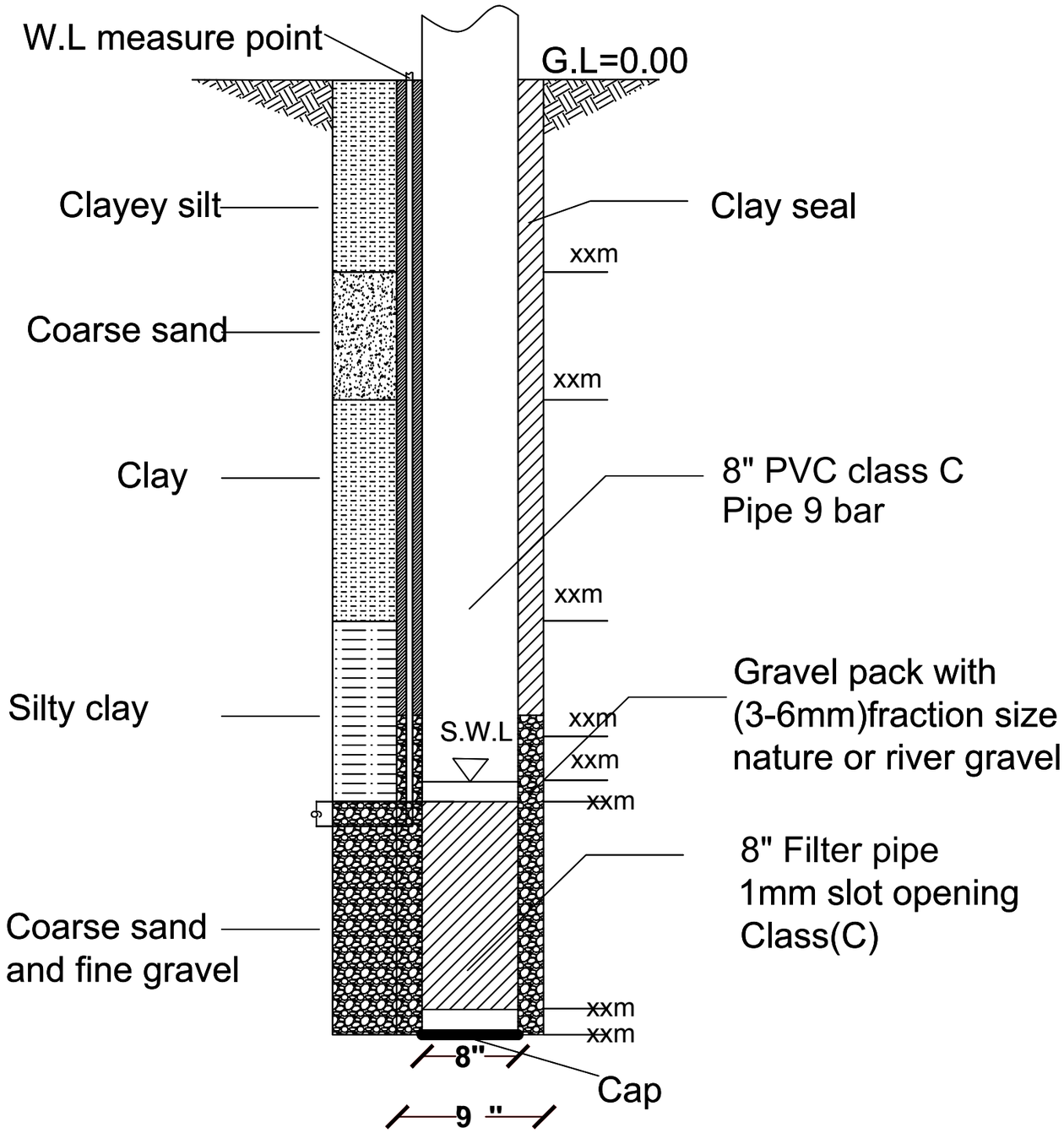

UNHCR | Afghanistan

Project Code	ORG-000-000
Project Title	New Construction of drilling in School
Drawing Title	Plan & front preview
Project Location	Oruzghan City

	Drawn By:	Designed By:	Checked By:	Reveiw By:	Approved By:	Sheet No:
Name	Eng.Amir M.	Eng.Amir M.				00 of 00
Sign						Scales:
Date						1:100

Plan & section of Generator Room for BHC

S I:100

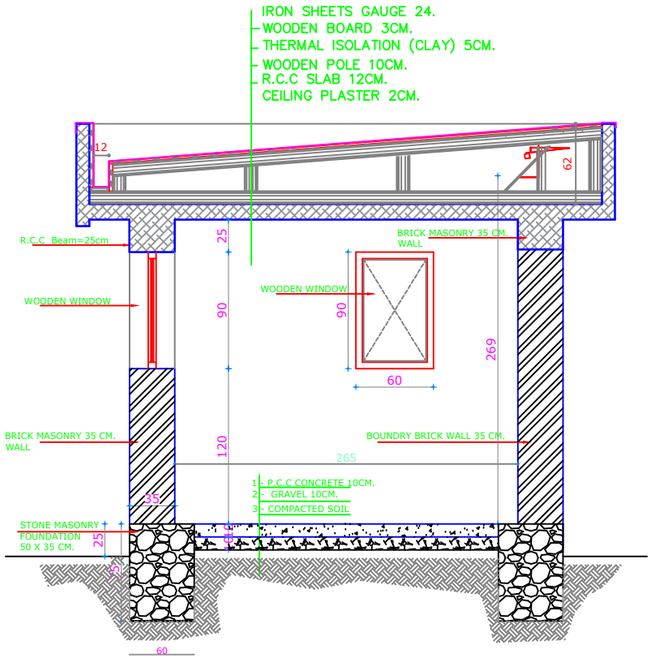

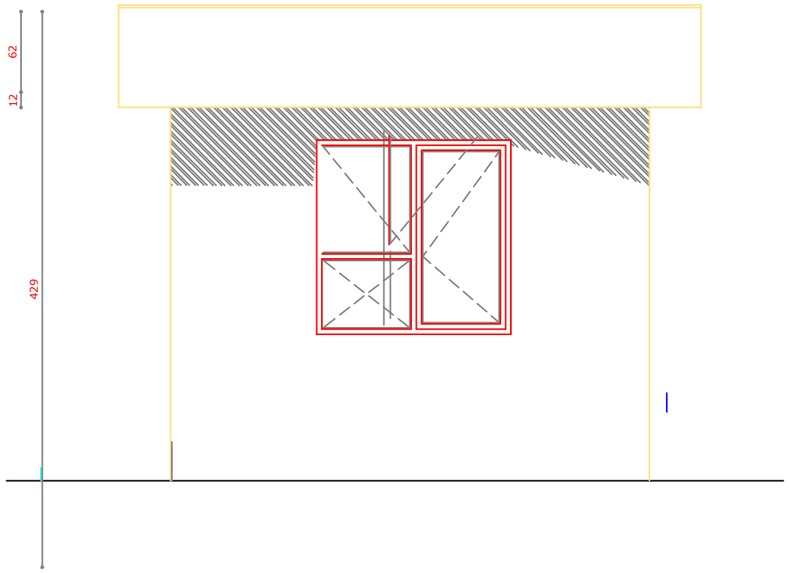

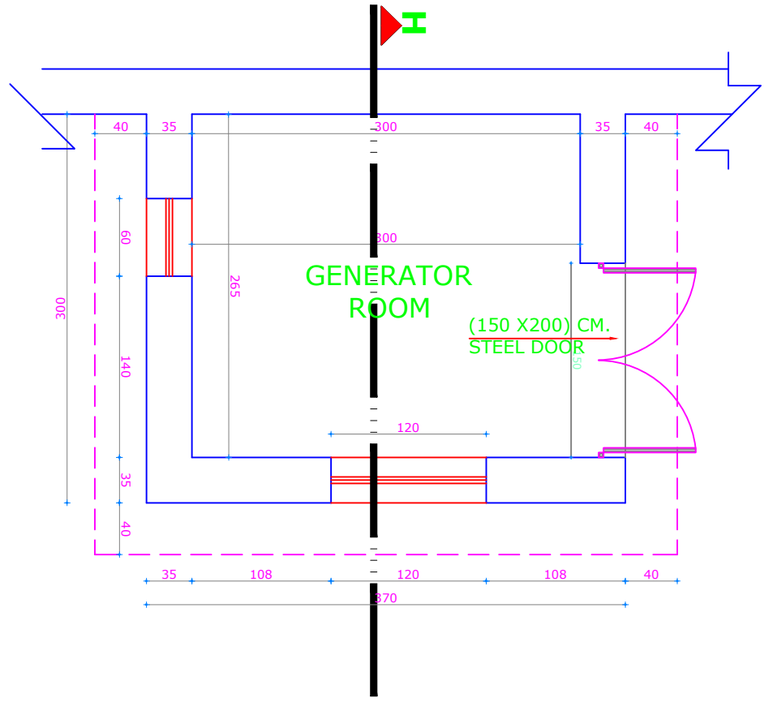

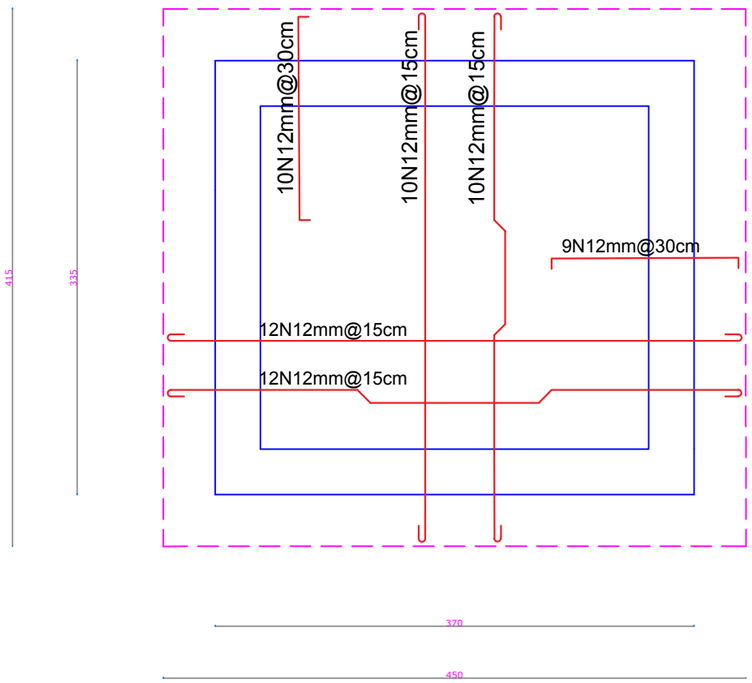

Note:

1-All dimension are in centimeters .
2-PCC shall be (1:2:4).
3-Mortar for stone masonry shall be (1:4).
4-Mortar for stone masonry shall be (1:3).
5-RCC shall be (1:1,5:3).
6-All steel bars should be not eroded or lubricated and has to be clean.
7-All steel bars should be Class(A1) Ra= 2100 Kg/cm² .
8-The curing must be not less than (28) days.

UNHCR The UN Refugee Agency | Afghanistan

NEMROZ BHC PROJECT

Project Code	NRZ - 000 - 000
Project Title	New Construction of Generator Room
Drawing Title	Plan ,Section Front Preview
Project Location	Kandahar City

	Drawn By:	Designed By:	Checked By:	Reveiw By:	Approved By:	Sheet No:
Name	Eng.Amir M.	Eng.Amir M.				00 of 00
Sign						Scales:
Date						1:100

Plan & section of Guord Room for BHC

S I:100

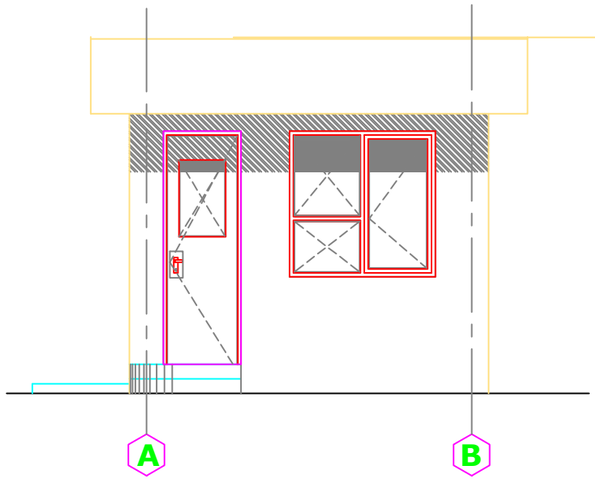

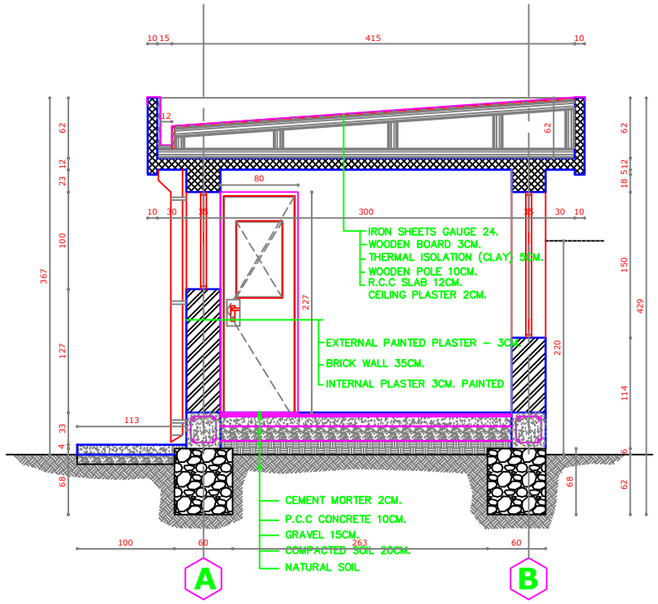

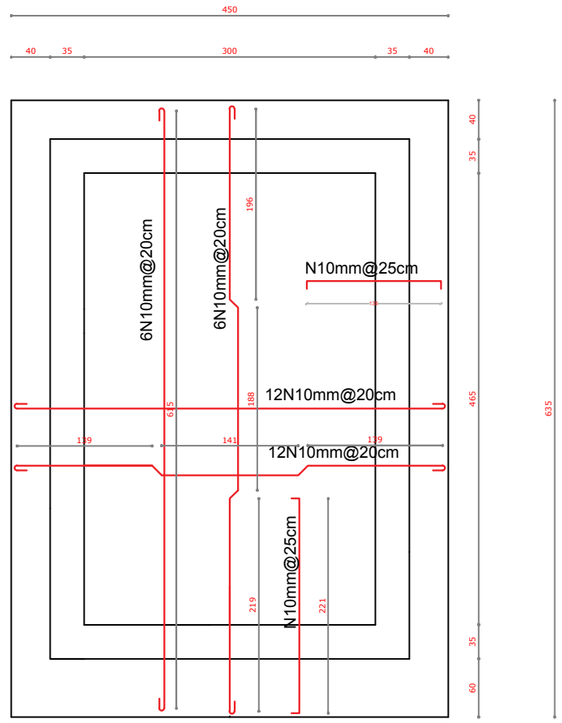

HOSE GURD

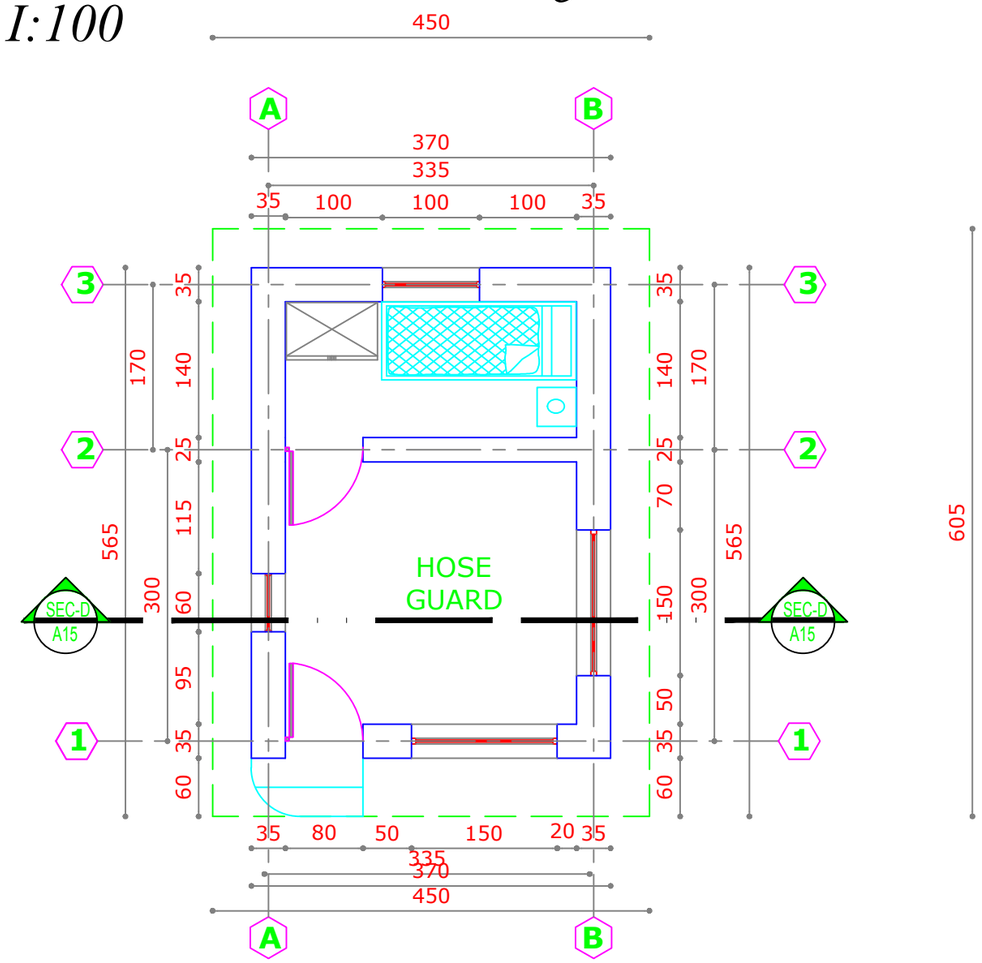

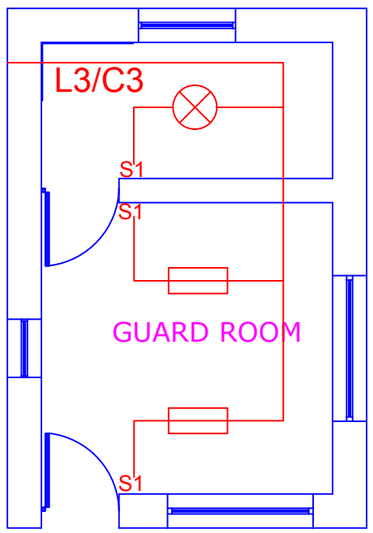

Note:

1-All dimension are in centimeters .
2-PCC shall be (1:2:4).
3-Mortar for stone masonry shall be (1:4).
4-Mortar for stone masonry shall be (1:3).
5-RCC shall be (1:1,5:3).
6-All steel bars should be not eroded or lubricated and has to be clean.
7-All steel bars should be Class(A1) Ra= 2100 Kg/cm² .
8-The curing must be not less than (28) days.

UNHCR The UN Refugee Agency | Afghanistan

NEMROZ BHC PROJECT

Project Code	NRZ - 000 - 000
Project Title	New Construction of Guard Room
Drawing Title	Plan ,Section Front Preview
Project Location	Zabul City

	Drawn By:	Designed By:	Checked By:	Reveiw By:	Approved By:	Sheet No:
Name	Eng.Amir M.	Eng.Amir M.				00 of 00
Sign						Scales:
Date						1:100

Boundary wall for BHC building

Plan 0f Burnet Brick boundary wall

SCALE 1:100

Section A-A

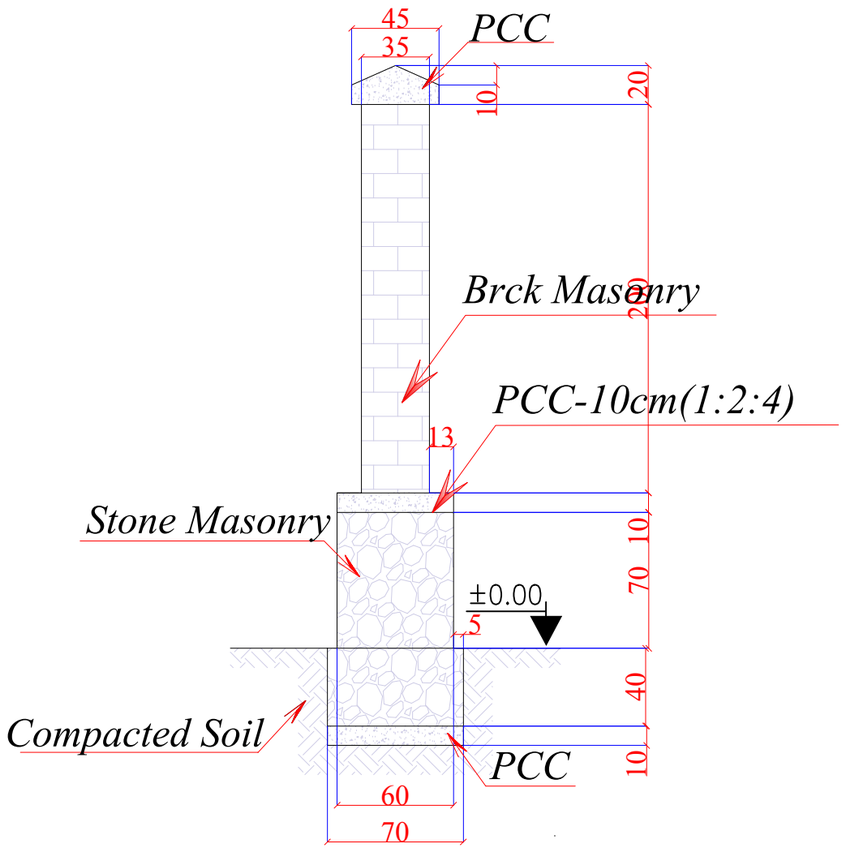

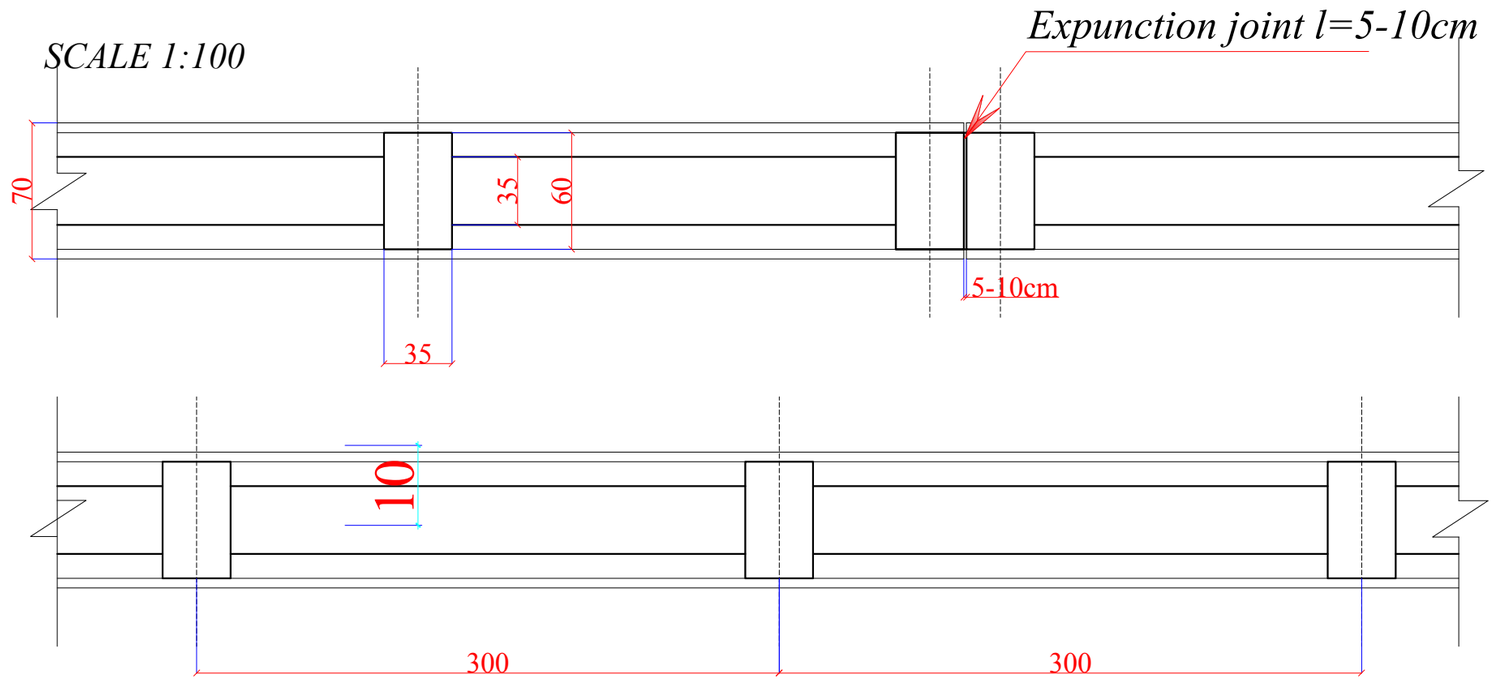

Lenght of Brick, stone masonry boundary wall=353m

Note:

1-All dimension are in centimeters .
2-PCC shall be (1:2:4).
3-Mortar for stone masonry shall be (1:4).
4-Mortar for stone masonry shall be (1:3).
5-RCC shall be (1:1,5:3).
6-All steel bars should be not eroded or lubricated and has to be clean.
7-All steel bars should be Class(A1) Ra= 2100 Kg/cm² .
8-The curing must be not less than (28) days.

UNHCR The UN Refugee Agency | Afghanistan

NEMROZ BHC PROJECT

Project Code	NER- 000 - 000
Project Title	New Construction of Boundary wall
Drawing Title	Plan & Sections of wall
Project Location	Kandahar City

	Drawn By:	Designed By:	Checked By:	Reveiw By:	Approved By:	Sheet No:
Name	Eng.Amir M.	Eng.Amir M.				00 of 00
Sign						Scales:
Date						1:100

Boundary wall BHC building
Main & Smal Steel gate of Boundary wall

SCALE 1:100

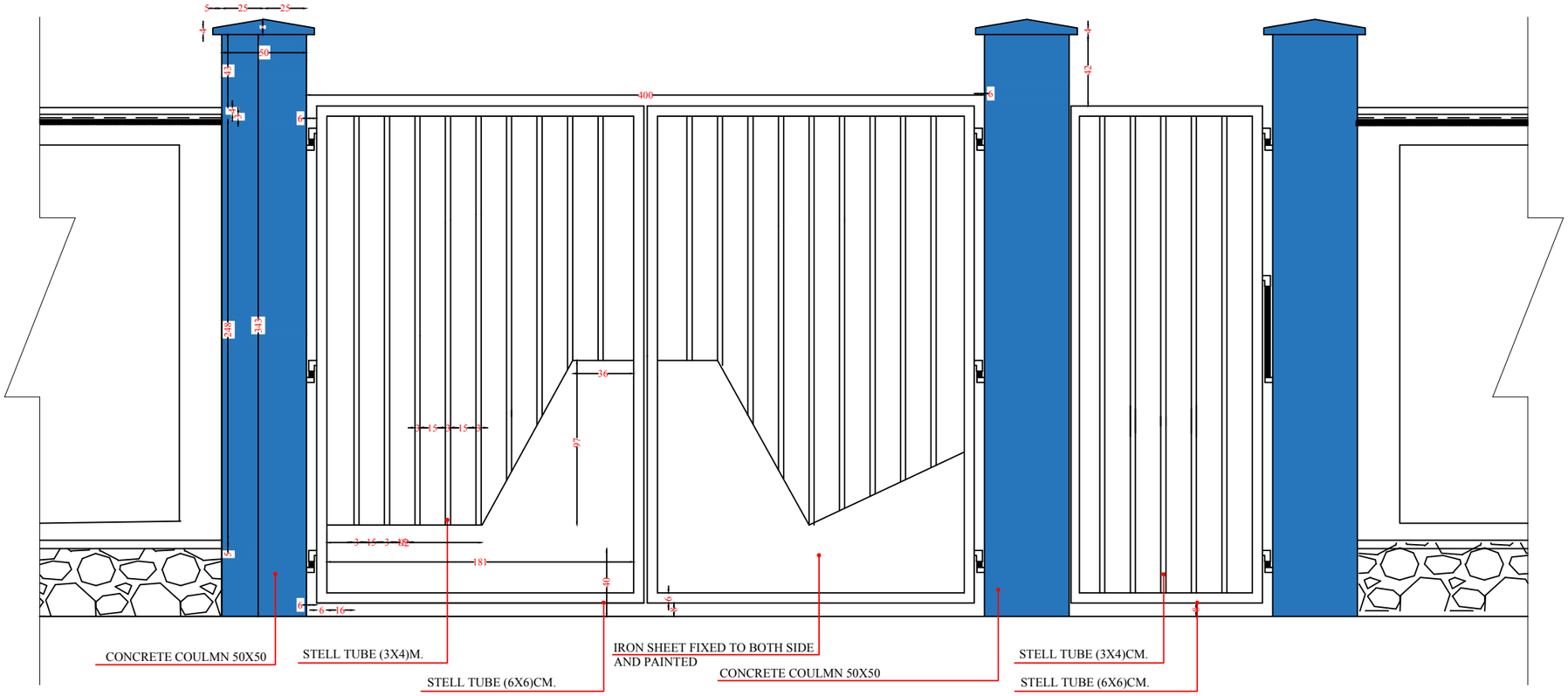

Note:

1-All dimension are in centimeters .
2-PCC shall be (1:2:4).
3-Mortar for stone masonry shall be (1:4).
4-Mortar for stone masonry shall be (1:3).
5-RCC shall be (1:1,5:3).
6-All steel bars should be not eroded or lubricated and has to be clean.
7-All steel bars should be Class(A1) Ra= 2100 Kg/cm² .
8-The curing must be not less than (28) days.

UNHCR The UN Refugee Agency | Afghanistan

NEMROZ BHC PROJECT

Project Code	NER- 000 - 000
Project Title	New Construction of Boundary wall
Drawing Title	Front Preview
Project Location	Kandahar City .

Drawn By:	Designed By:	Checked By:	Reveiw By:	Approved By:	Sheet No:
Name Eng.Amir M.	Eng.Amir M.				00 of 00
Sign					Scales:
Date					1:100

Plan 0f Toilets

SCALE 1:100

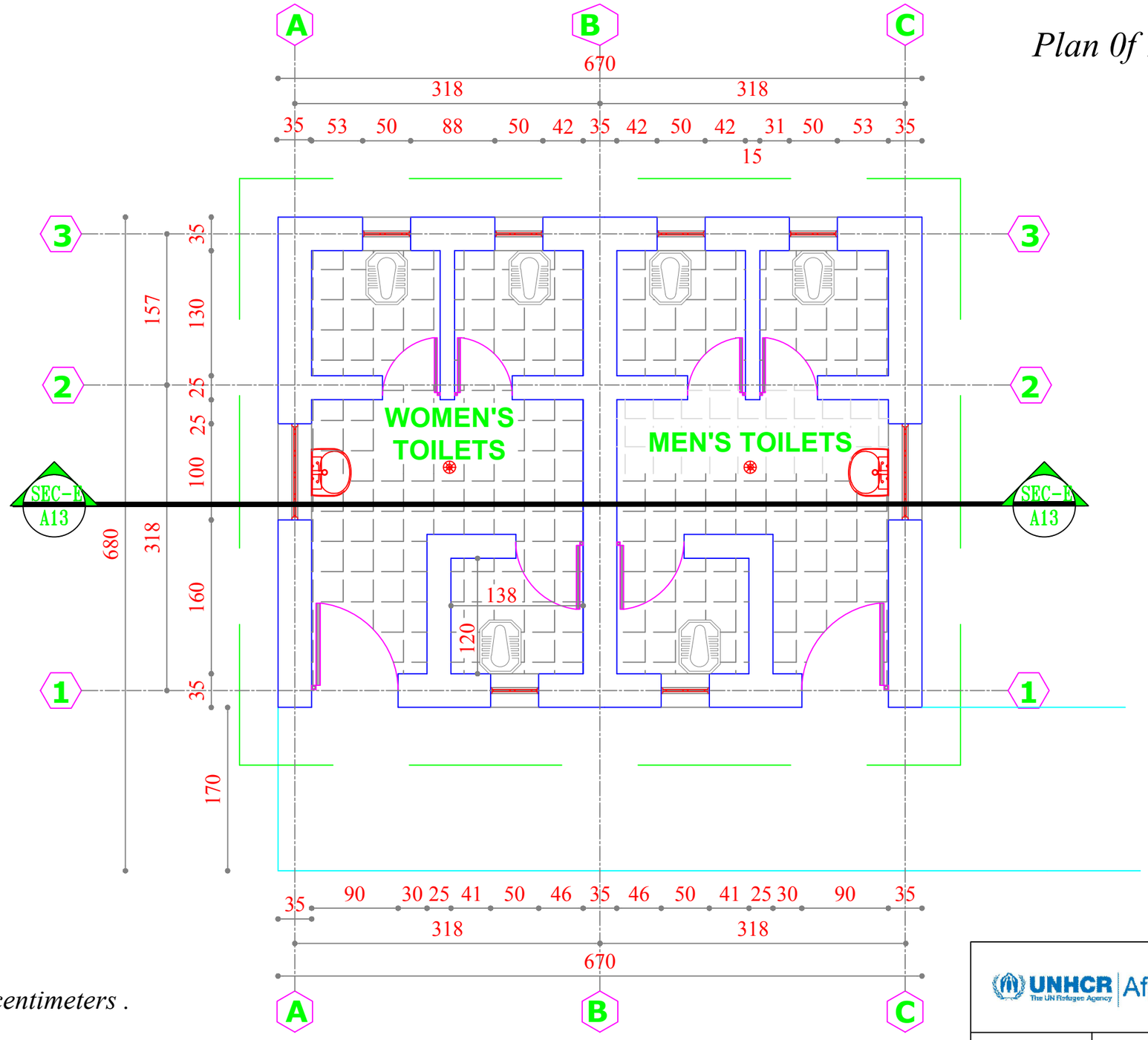

Note:

1-All dimension are in centimeters .
2-PCC shall be (1:2:4).
3-Mortar for stone masonry shall be (1:4).
4-Mortar for Brick masonry shall be (1:3).
5-RCC shall be (1:1,5:3).
6-All steel bars should be not eroded or lubricated and has to be clean.
7-All steel bars should be Class(A1) Ra= 2100 Kg/cm² .
8-The curing must be not less than (28) days.

UNHCR The UN Refugee Agency | Afghanistan

NEMROZ BHC- PROJECT

Project Code	NRZ- 000 - 000
Project Title	New Construction of Toilets
Drawing Title	reinforcement bending floor of building
Project Location	Nemroz City

	Drawn By:	Designed By:	Checked By:	Reveiw By:	Approved By:	Sheet No:
Name	Eng.Amir M.	Eng.Amir M.				00 of 00
Sign						Scales:
Date						1:100

Front Preview 0f Construction Toilets

SCALE 1:100

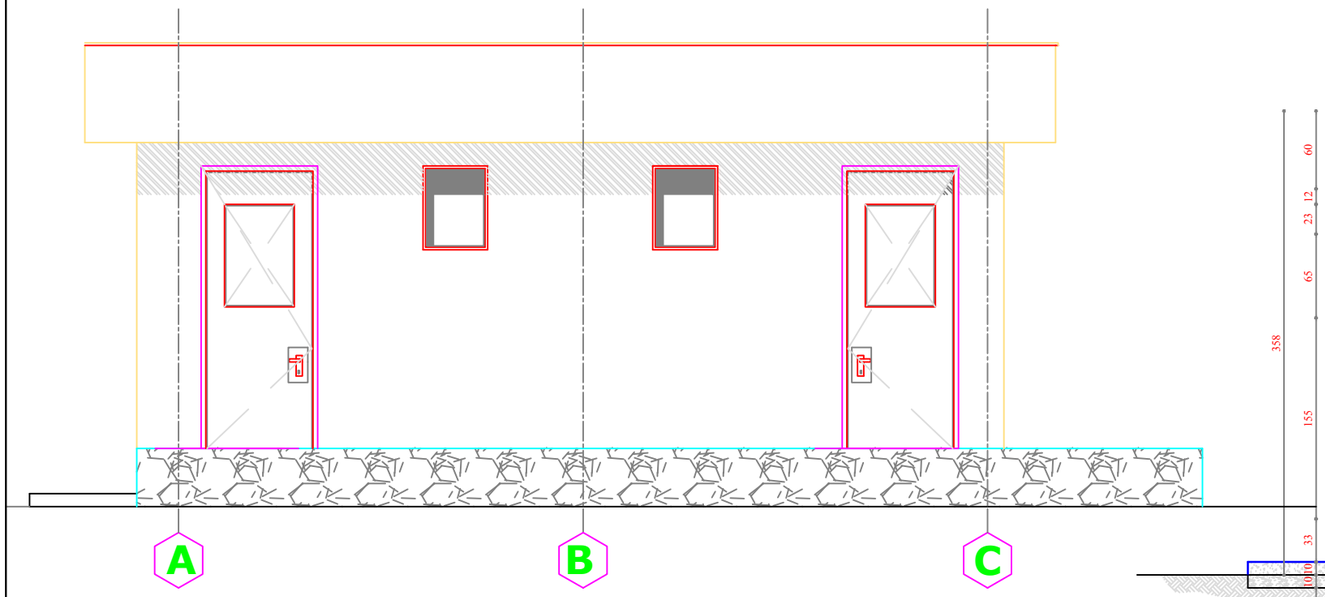

Section A-A

SCALE 1:100

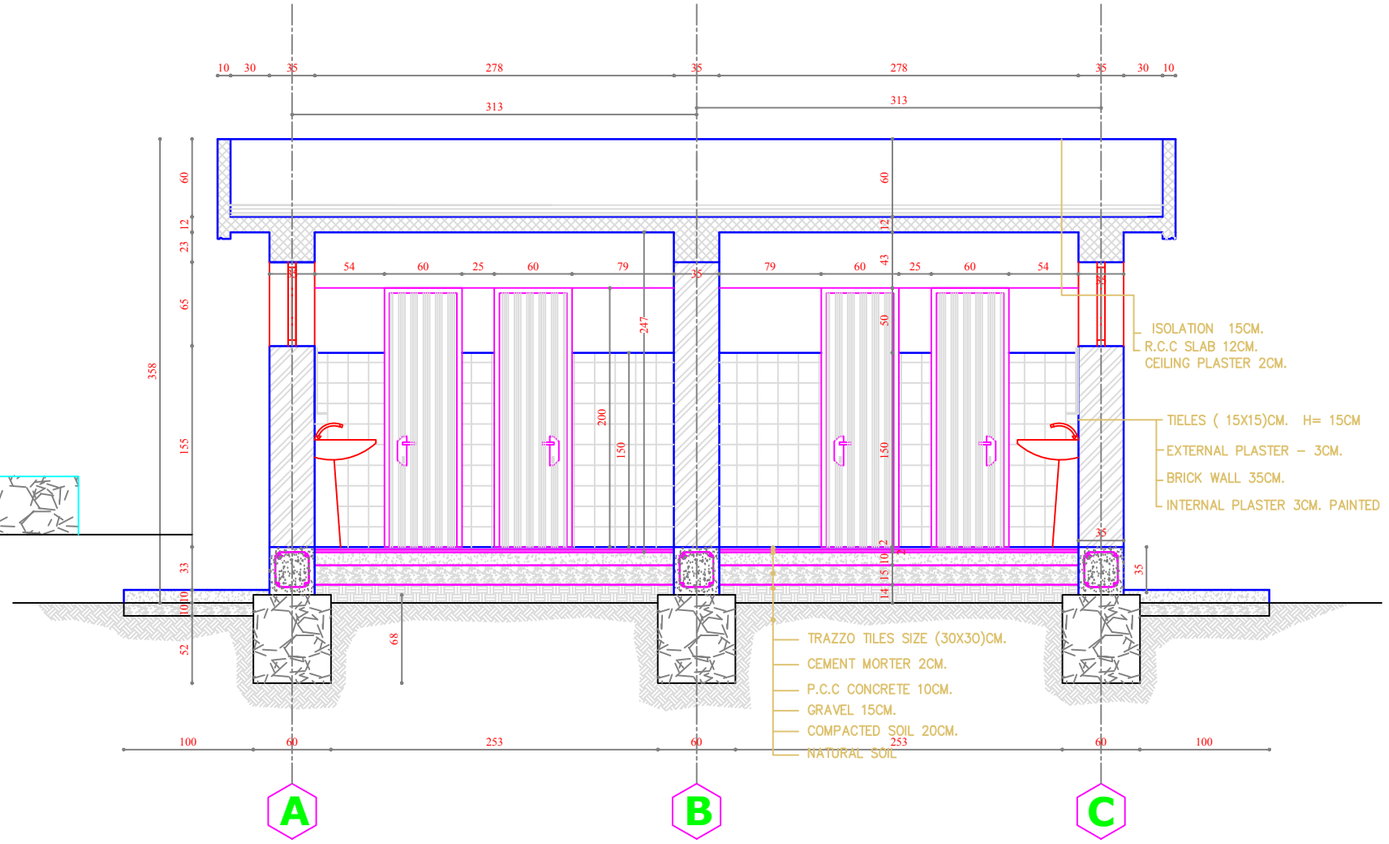

Note:

1-All dimension are in centimeters .
2-PCC shall be (1:2:4).
3-Mortar for stone masonry shall be (1:4).
4-Mortar for Brick masonry shall be (1:3).
5-RCC shall be (1:1,5:3).
6-All steel bars should be not eroded or lubricated and has to be clean.
7-All steel bars should be Class(A1) Ra= 2100 Kg/cm² .
8-The curing must be not less than (28) days.

UNHCR The UN Refugee Agency | Afghanistan

NEMROZ BHC- PROJECT

Project Code	NRZ- 000 - 000
Project Title	New Construction of Toilets
Drawing Title	front preview & Section of building
Project Location	Nemroz City

	Drawn By:	Designed By:	Checked By:	Reveiw By:	Approved By:	Sheet No:
Name	Eng.Amir M.	Eng.Amir M.				00 of 00
Sign						Scales:
Date						1:100

Electration Plan 0f Construction Toilets

SCALE 1:100

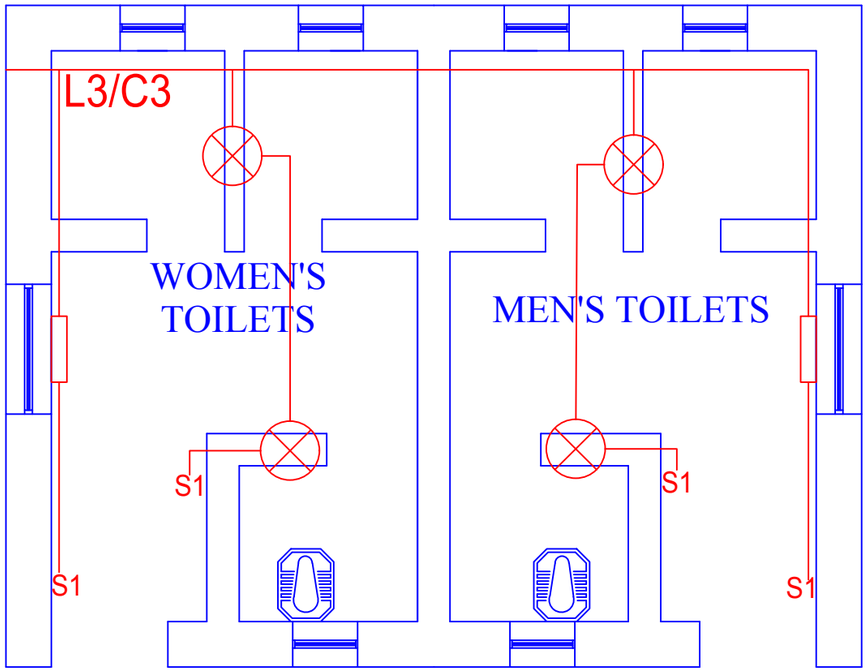

Mecanical Plan 0f Construction Toilets

SCALE 1:100

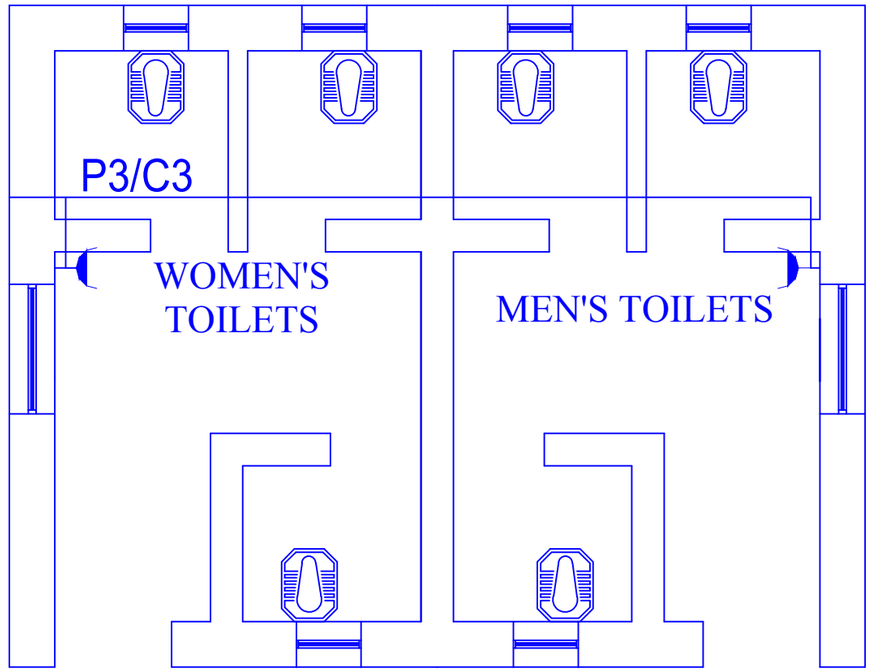

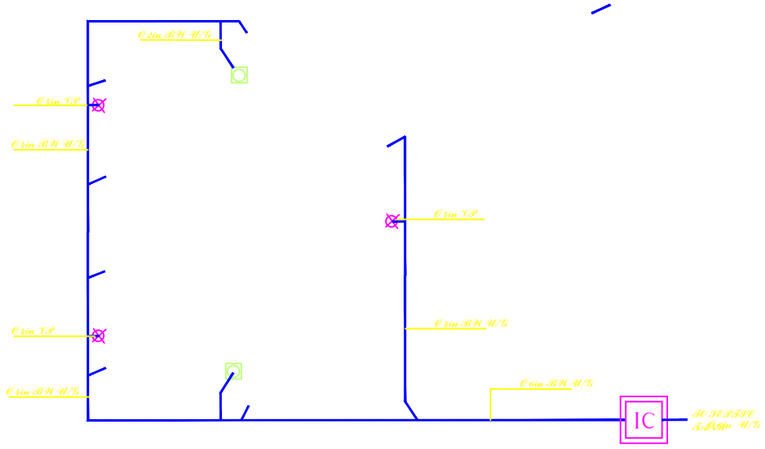

1 EXTERIOR TOILETS DRAINAGE PLAN SCALE= 1/40

Note:

1-All dimension are in centimeters .
2-PCC shall be (1:2:4).
3-Mortar for stone masonry shall be (1:4).
4-Mortar for Brick masonry shall be (1:3).
5-RCC shall be (1:1,5:3).
6-All steel bars should be not eroded or lubricated and has to be clean.
7-All steel bars should be Class(A1) Ra= 2100 Kg/cm² .
8-The curing must be not less than (28) days.

UNHCR The UN Refugee Agency | Afghanistan

NEMROZ BHC- PROJECT

Project Code	NRZ- 000 - 000
Project Title	New Construction of Toilets
Drawing Title	Felicitation & Mechanical plan
Project Location	Nemroz City

Drawn By:		Designed By:	Checked By:	Reveiw By:	Approved By:	Sheet No:
Name	Eng.Amir M.	Eng.Amir M.				00 of 00
Sign						Scales:
Date						1:100

STEL BENDING PLAN OF SLAB

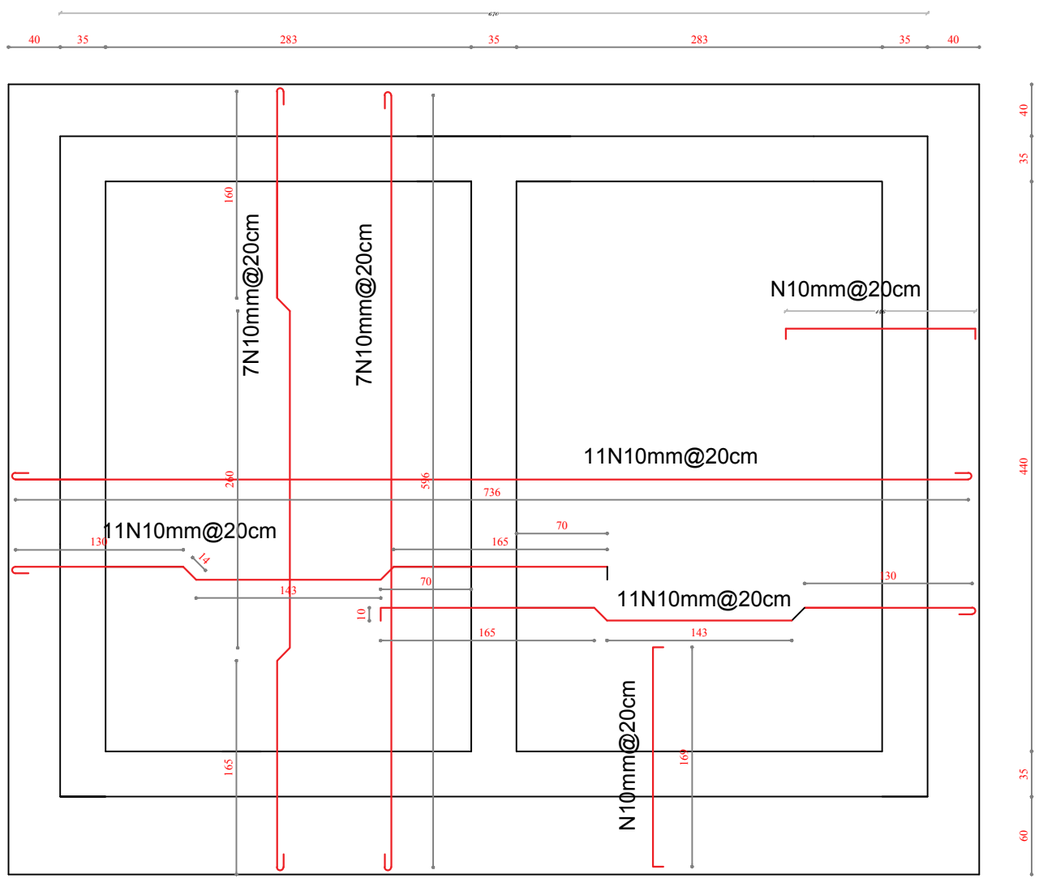

TOILAT

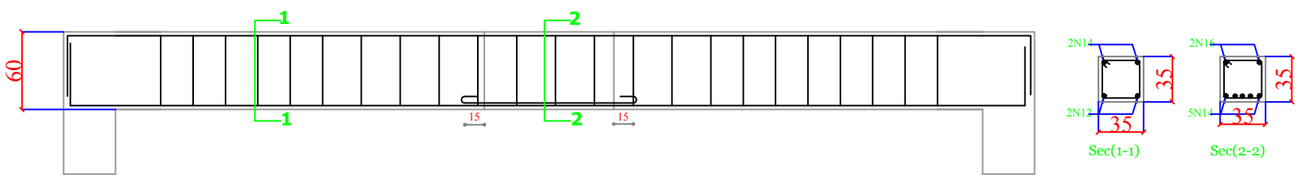

Specification:

1.Slab thickness: for slabs is 12 cm
2.for parapets is 7.5
3.cover : for slab is 2.5 cm ,for beams is 3cm for column is 4cm , for foundation is 6cm
4.plaster thickness: for walls shall be 2cm , for ceiling

shall be 1cm of cement , lime ,sand at ratio of (1:5:10)
5.forms work : shall be straight , perpendicular structural and visual requirement .do not use weak formwork that Causes bulges, gaps or holes in the poured concrete.
Reinforcing bars: reinforcing steel bar for all members shall be deformed bars and shall be minimum yield strength of 2400 kg/sqcm. The steel bars for all members shown in drawing.

6.Concert: all reinforcement concerts shall be power machine mixed and machine vibrated. the concert mark shall be in
Foundation is 150kg/sqcm ,for slabs ,beams and ring beams

is 200kg /sqcm in (1:1.5:3) & in columns shall be 250kg/sqcm
(1:1:2).

7.Aggregates: aggregates shall be clean crushed rock, hard, free from coating and dust. the maximum size of aggregate shall bee
20 mm and not exceeding 75
between steel reinforcement or between reinforcement and formwork. % of the clear spacing
8. Earthquake coefficients: This is considerate in design
I= 1.5 (for hospital & clinics)
K= 1 (for ordinary frame

9. the dimension of foundation is designed for Bearing capacity =2Ton/m2 if the BC is smallar than this ,the dimenson must be chang according bearing capacity of that earth. structure building)

UNHCR The UN Refugee Agency | Afghanistan

NEMROZ BHC- PROJECT

Project Code	NRZ- 000 - 000
Project Title	New Construction of Toilets
Drawing Title	Reinforcement bending floor of building
Project Location	Nemroz City

	Drawn By:	Designed By:	Checked By:	Reveiw By:	Approved By:	Sheet No:
Name	Eng.Amir M.	Eng.Amir M.				00 of 00
Sign						Scales:
Date						1:100

Solar panel frame design and specification

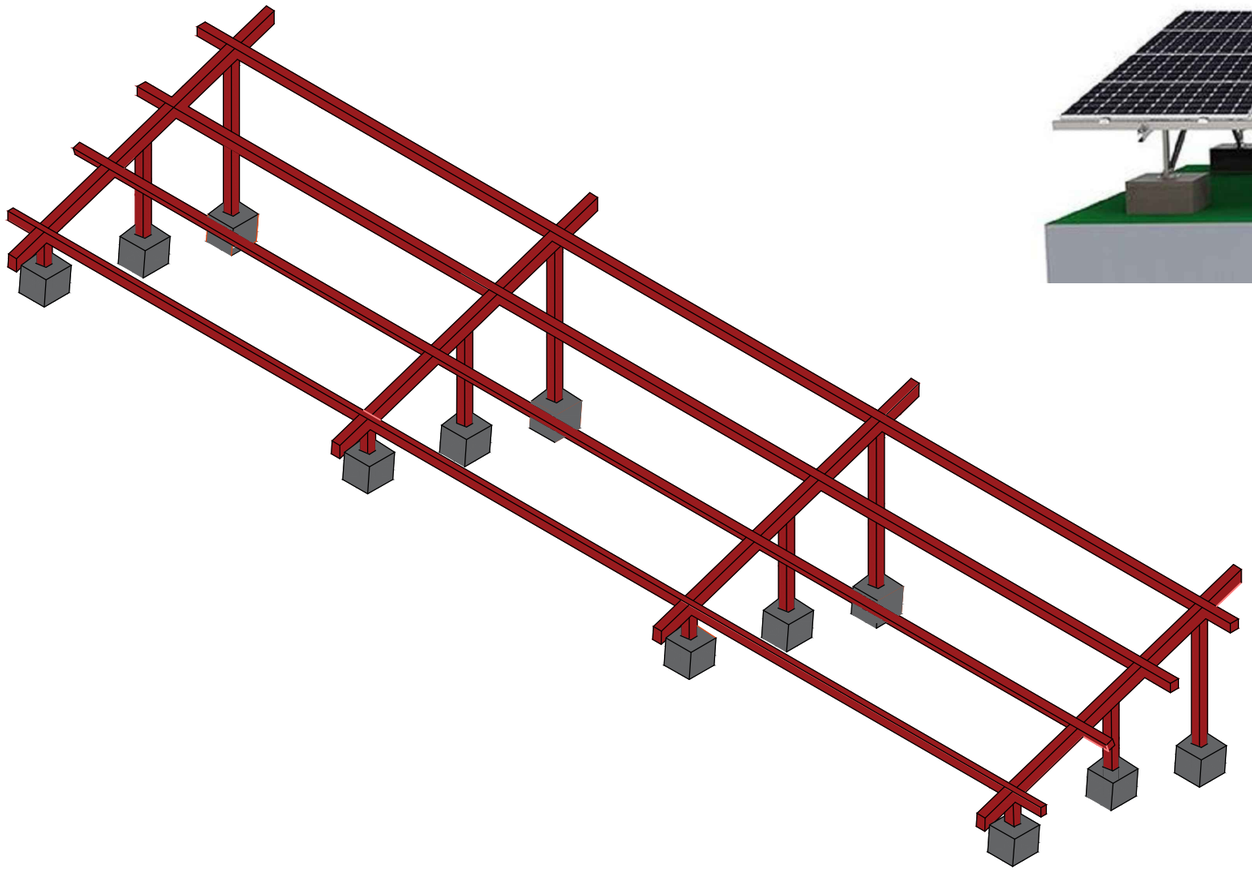

Note:

1-All dimension are in mater .

UNHCR The UN Refugee Agency | Afghanistan

زنان برای زنان افغان
ښځې د افغان ښځو لپاره
WOMEN FOR AFGHAN WOMEN

Project code	KDR - 000 - 000			
Project				
Drawing Title	Solar panel frame design and specification			
Project Location	South Region Kandahar Afghanistan			
	Drawn By:	Designed By:	Checked By:	
Name	Engr.Esmatullah	Engr.Esmatullah	Engr. Imran danish	
Sign				
Date				

Solar panel frame design and specification

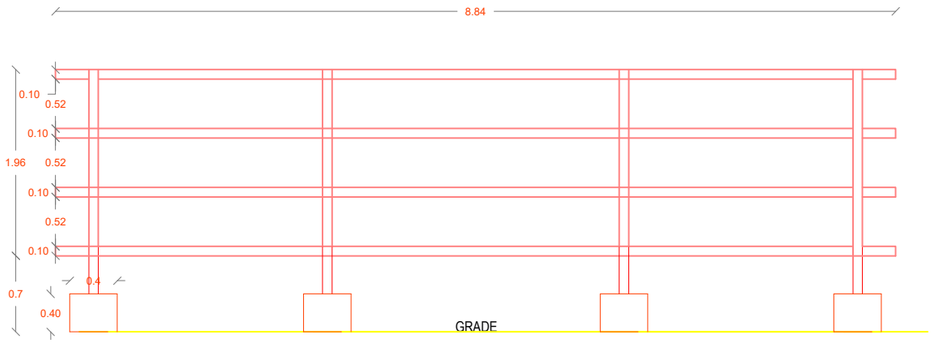

FRONT VIEW

SAMPLE IMAGE

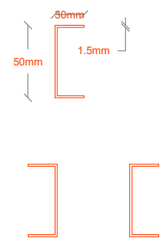

DETAILS of L Ring

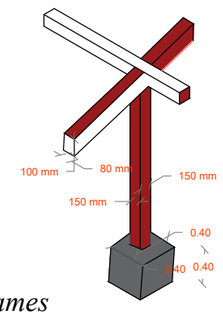

DETAILS of L Ring

Note:

1-Steel for frame will be 18 Gouge
2-Solar panels must be netted and bolted in L Ring frames
3-L Ring will be (thickness=1.5mm)
4-Frames must be welded by electricity
5-All dimension are in Meter .

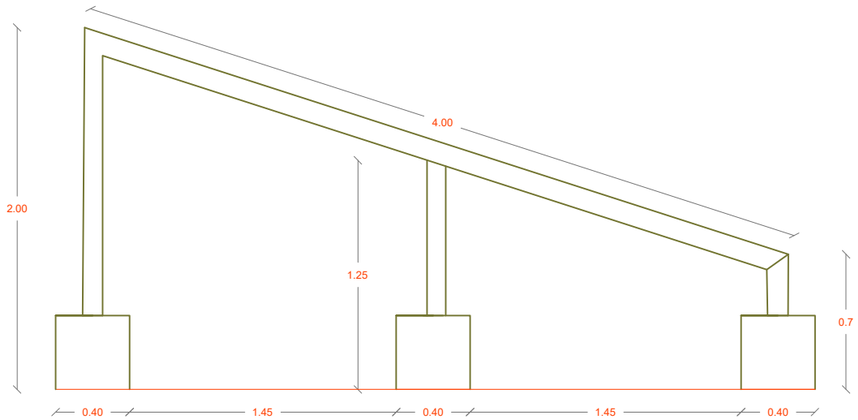

SECTION VIEW

UNHCR The UN Refugee Agency | Afghanistan

زنان برای زنان افغان
ښځې د افغان ښځو لپاره
WOMEN FOR AFGHAN WOMEN

Project code	KDR - 000 - 000
Project	
Drawing Title	Solar panel frame design and specification
Project Location	South Region Kandahar Afghanistan

	Drawn By:	Designed By:	Checked By:	
Name	Engr.Esmatullah	Engr.Esmatullah	Engr. Imran danish	
Sign				
Date				

Solar panel frame design and specification

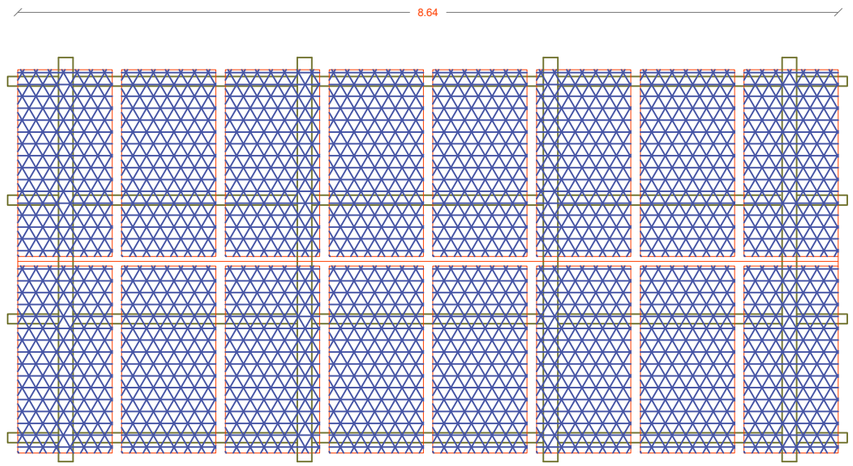

TOP VIEW

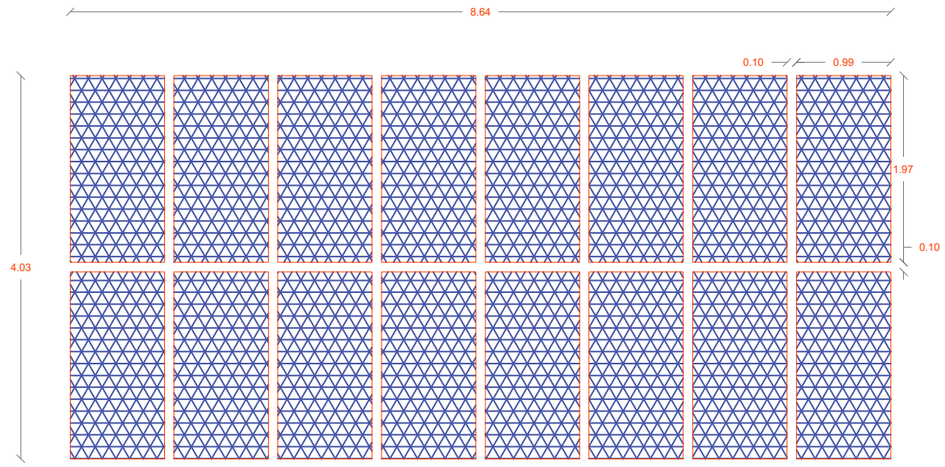

Top VIEW

Note:

1-Steel for frame will be 18 Gouge
2-Solar panels must be netted and bolted in L Ring frames
3-L Ring will be (thickness=1.5mm)
4-Frames must be welded by electricity
5-All dimension are in Meter .

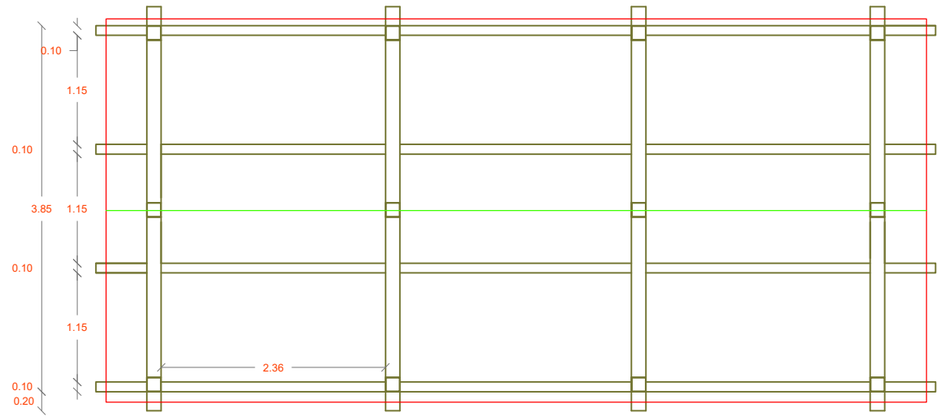

TOP VIEW

UNHCR The UN Refugee Agency | Afghanistan

زنان برای زنان افغان
ښځې د افغان ښځو لپاره
WOMEN FOR AFGHAN WOMEN

Project code	KDR - 000 - 000
Project	
Drawing Title	Solar panel frame design and specification
Project Location	South Region Kandahar Afghanistan

	Drawn By:	Designed By:	Checked By:	
Name	Engr.Esmatullah	Engr.Esmatullah	Engr. Imran danish	
Sign				
Date				

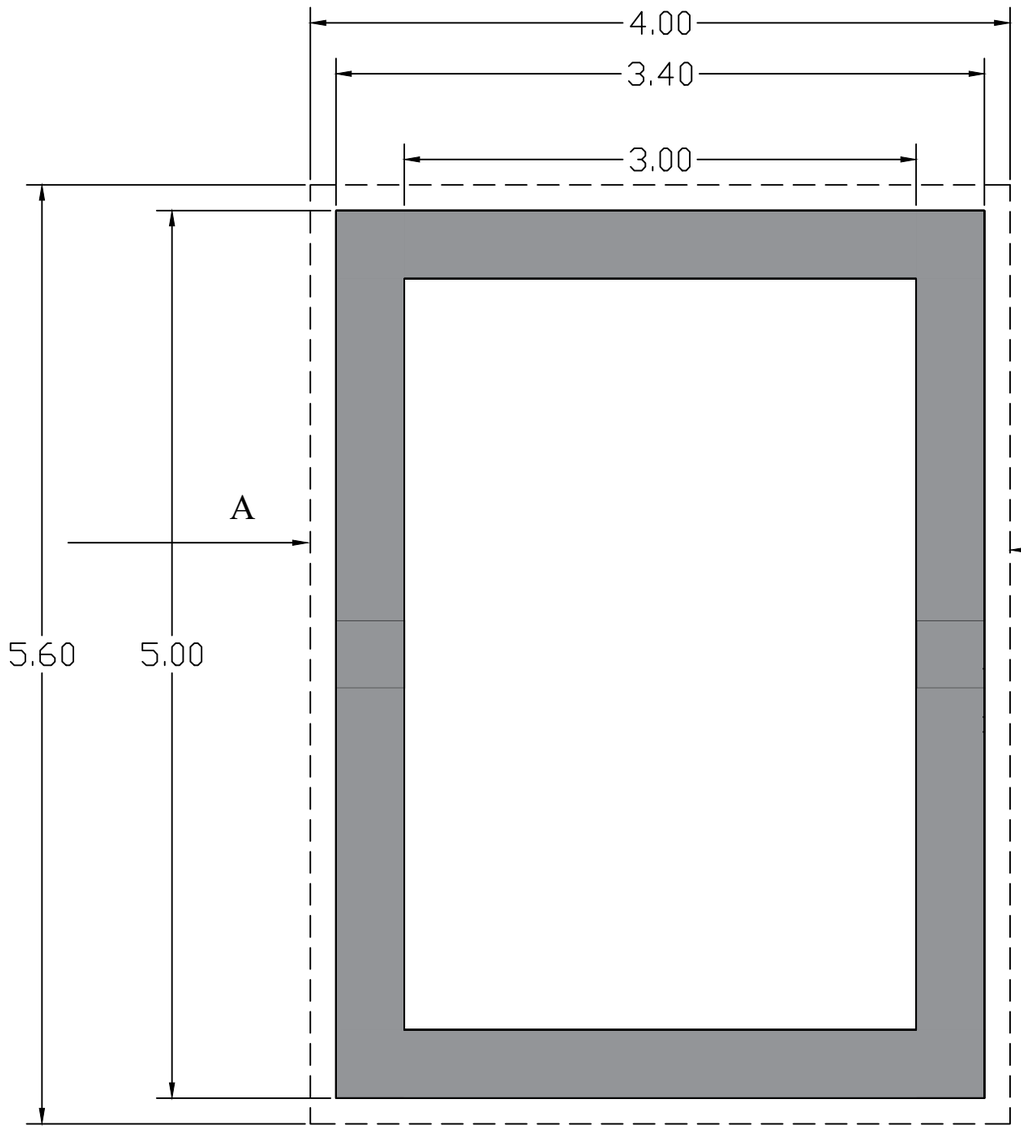

PLAN OF RESERVOIR

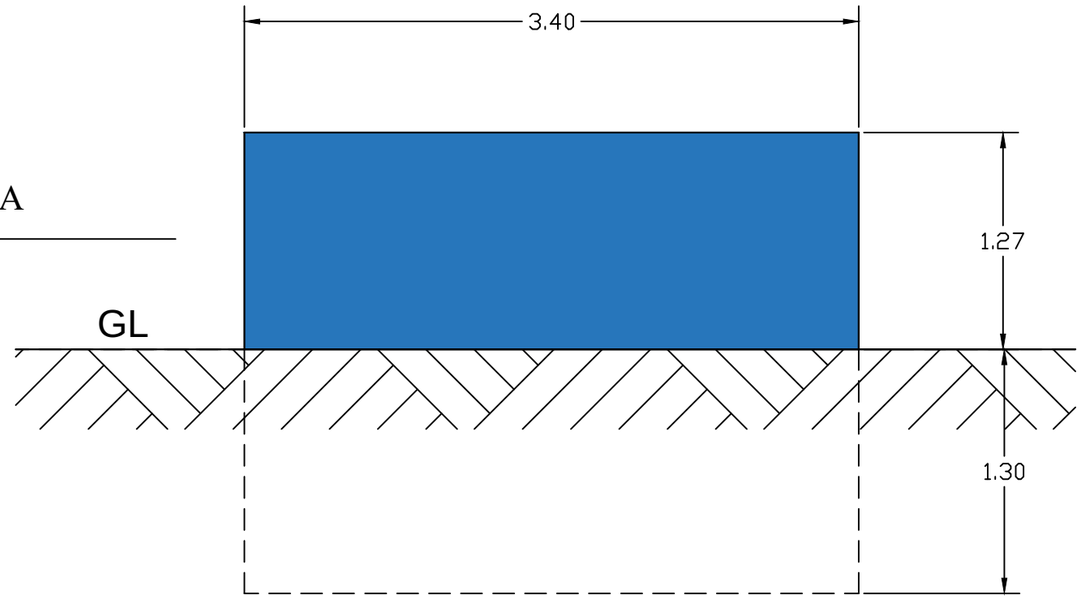

RESERVOIR ELEVATION

No	Date	Revision		
1			Survey by	
2			Structural.D. by	
3			Drawn by	
			Approved by	

MINISTRY OF EDUCAION AFGHANISTAN
OFFICE :
PROGRAM:WATER SUPPLY
ENGINEERING DEPARTMENT

Scale	1 : 100	S. No.	01/01	Province
Date	25 09 17			District
Drawing No.	ST-01			Village

Project name: RCC elevated Water reservoir 30.0 m3
Drawing Title: Plan & sections

SECTION A-A

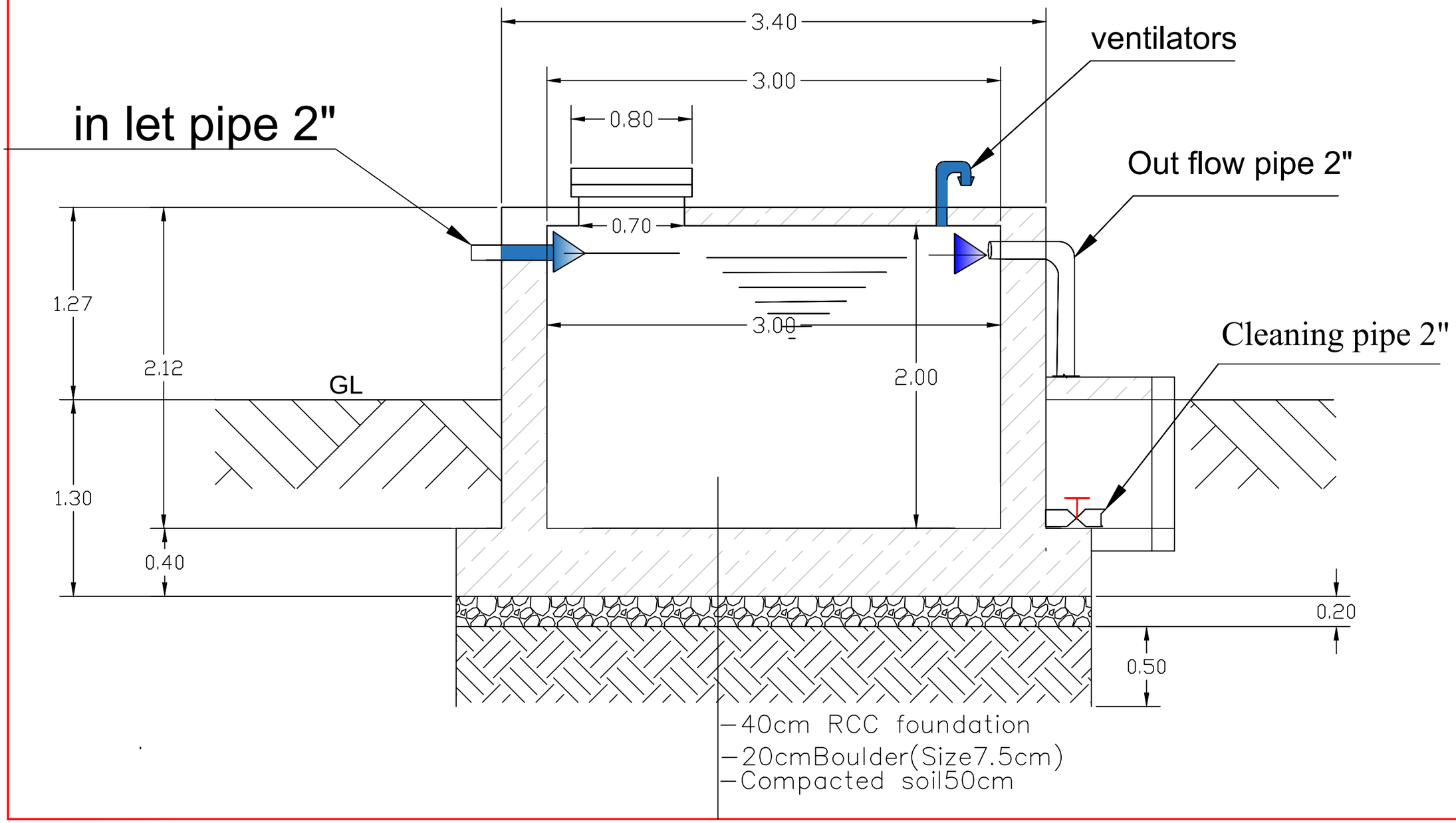

No	Date	Revision		
			Survey by	
1			Structural.D. by	
2			Drawn by	
3			Approved by	

MINISTRY OF EDUCAION AFGHANISTAN
OFFICE :
PROGRAM:WATER SUPPLY
ENGINEERING DEPARTMENT

Scale	1 : 100	No.	01/01	Province
Date	25 09 17			District
Drawing No.	ST-01			

REINFORCEMENT DETAIL

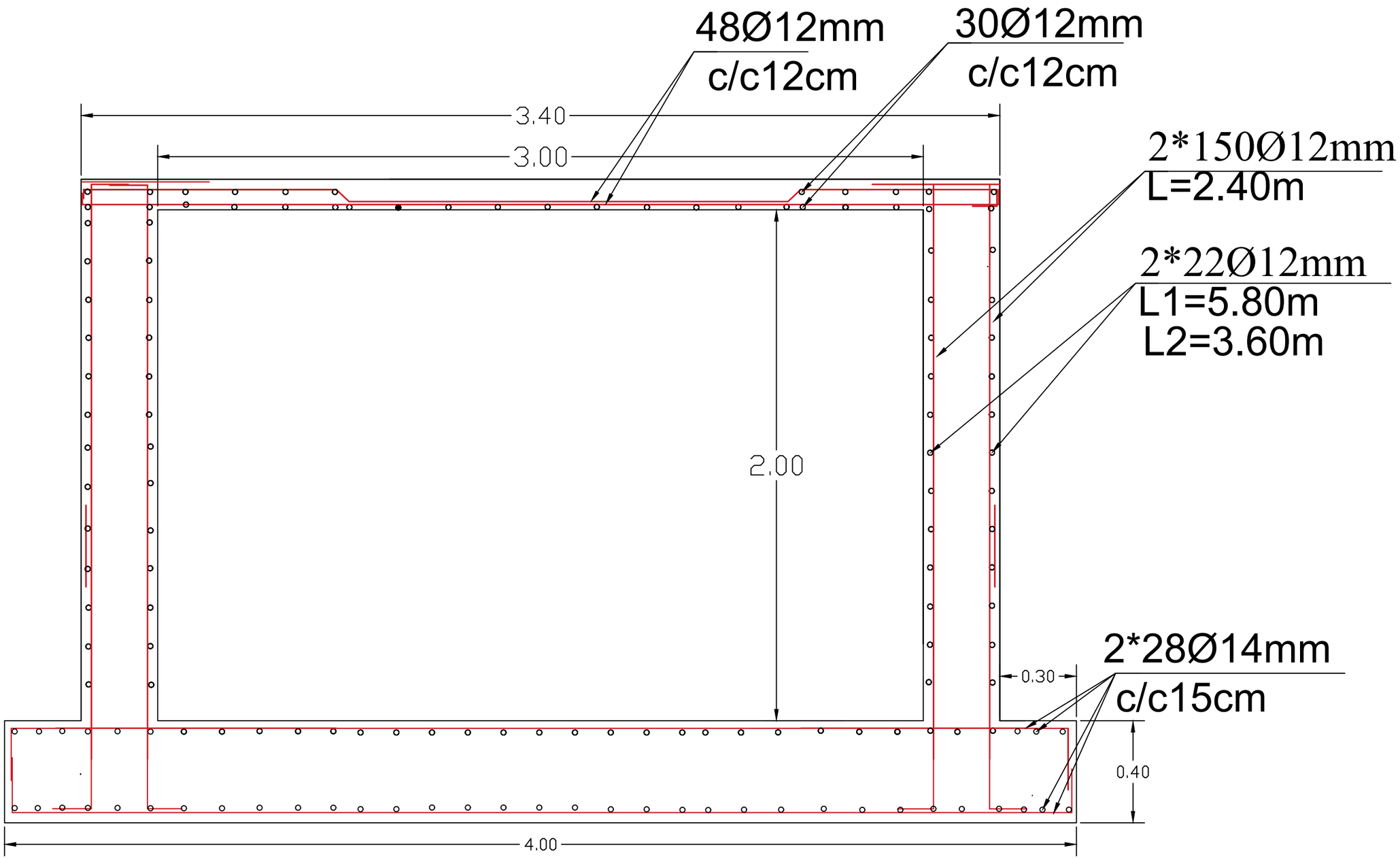

No	Date	Revision	Survey by
1			Structural.D. by
2			Drawn by
3			Approved by

MINISTRY OF EDUCATION AFGHANISTAN
OFFICE :
PROGRAM:WATER SUPPLY
ENGINEERING DEPARTMENT

Scale	1 : 100
Date	25 09 17
Drawing No.	ST-01

Province
District
Village

No 01 01

Project name: RCC elevated water reservoir 30.0 m3
Drawing Title: Plan & sections

PRODUCED BY AN AUTODESK EDUCATIONAL PRODUCT

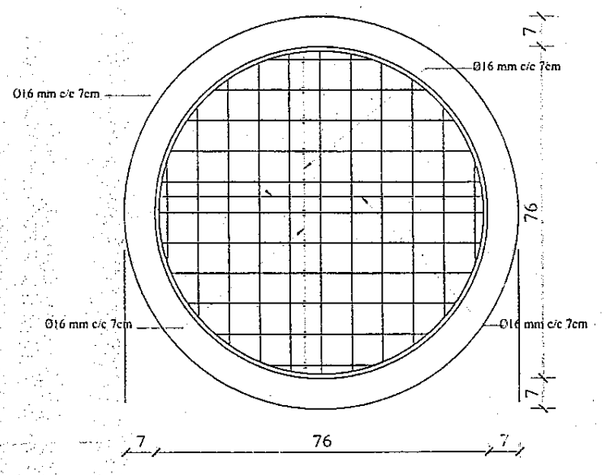

Code **201/240 Lit.**

BASKET PRICE 3000 AFGHANIS. (1)

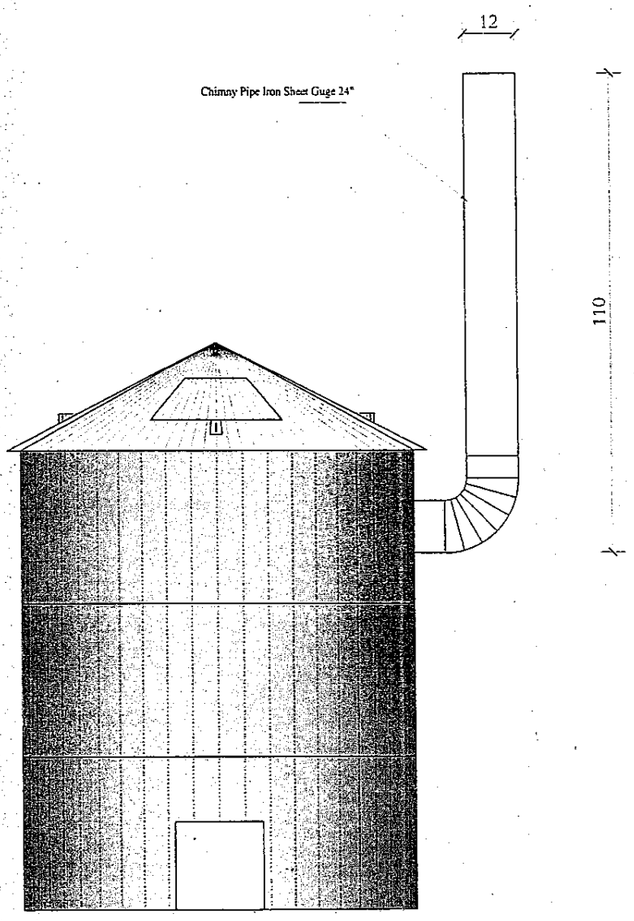

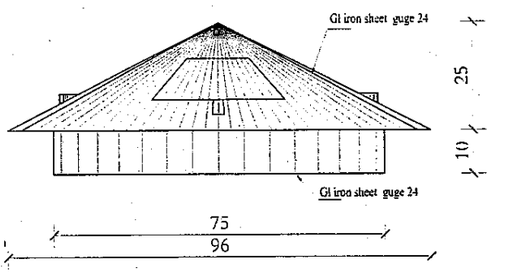

View of Iron Sheet Cover guge 24"

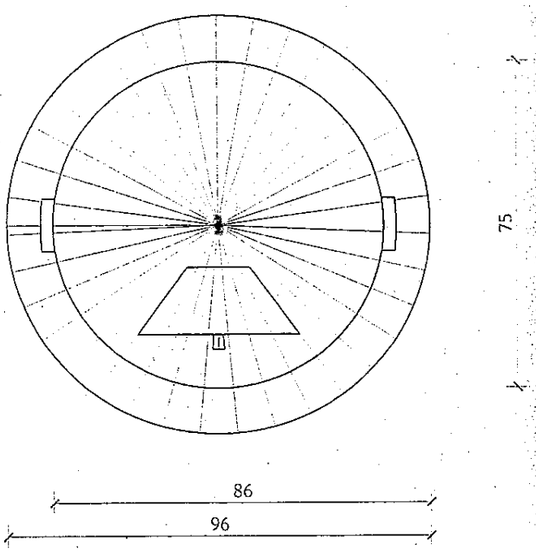

Plan of Iron Sheet ·Cover guge 24"

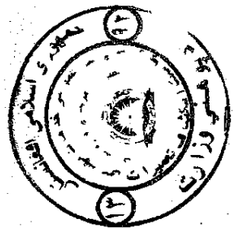

MINISTRY OF EDUCATION DEPARTMENT OF CONTRACTION	STANDARD SCHOOL DESIGN IN AFGHANISTAN	ARCHITECTURE DESIGN	DRAWING BY	APPROVED BY	ENG. CHECKED BY	TYPE	ARCHITECTURE
		CHECKED BY	ARCHITECT	SCALE		SHEET No	2/2
		TECH. APPROVED BY	ENGINEER	DATE			

PROJECT NAME	PCC GARBAGE Ø 90 CM
DRAWING TITLE	View & deatil

PRODUCED BY AN AUTODESK EDUCATIONAL PRODUCT
PRODUCED BY AN AUTODESK EDUCATIONAL PRODUCT
PRODUCED BY AN AUTODESK EDUCATIONAL PRODUCT